CASTI

Metals Blue Book™

Welding Filler Metals

CASTI Publishing Inc.
10566 - 114 Street
Edmonton, Alberta T5H 3J7 Canada
Tel:(780) 424-2552 Fax:(780) 421-1308

3rd Edition on CD-ROM™

CASTI

Search

Subject Index

Table of Contents

E-Mail: casti@casti.ca
Internet Web Site: www.casti.ca

CASTI METALS BLUE BOOK™
Welding Filler Metals

3rd Edition

CASTI Metals Data Book Series™

Co-Published By:

***CASTI* Publishing Inc.**
10566 - 114 Street
Edmonton, Alberta, T5H 3J7, Canada
Tel: (780) 424-2552 Fax: (780) 421-1308
Email: casti@casti.ca
Internet Web Site: http://www.casti.ca

and

American Welding Society
550 N.W. LeJeune Rd.
Miami, Florida 33126, USA
Tel: (305) 443-9353 Fax: (305) 443-7559
E-mail: info@aws.org
Internet Web Site: http://www.amweld.org

ISBN 1-894038-44-4
Printed in Canada

Important Notice

The material presented herein has been prepared for the general information of the reader and should not be used or relied upon for specific applications without first securing competent technical advice. Nor should it be used as a replacement for current complete engineering standards. In fact, it is highly recommended that current engineering standards be reviewed in detail prior to any decision-making. See the list of standards organizations, technical societies and associations in Appendix 4, many of which prepare engineering standards, to acquire the appropriate metal standards or specifications.

While the material in this book was compiled with great effort and is believed to be technically correct, *CASTI* Publishing Inc. and its staff do not represent or warrant its suitability for any general or specific use and assume no liability or responsibility of any kind in connection with the information herein.

Nothing in this book shall be construed as a defense against any alleged infringement of letters of patents, copyright, or trademark, or as defense against liability for such infringement.

First printing of 3rd Edition, February 2000
ISBN 1-894038-44-4 Copyright © 1998, 2000

All rights reserved. No part of this book covered by the copyright hereon may be reproduced or used in any form or by any means - graphic, electronic, or mechanical, including photocopying, recording, taping, or information storage and retrieval systems without the written permission of the publisher.

CASTI PUBLICATIONS

CASTI Metals Data Book Series™

CASTI Metals Black Book™ - North American Ferrous Data
CASTI Metals Black Book™ - European Ferrous Data
CASTI Metals Red Book™ - Nonferrous Metals
CASTI Metals Blue Book™ - Welding Filler Metals

CASTI Guidebook Series™

Volume 1 - *CASTI* Guidebook to ASME Section II - Materials Index
Volume 2 - *CASTI* Guidebook to ASME Section IX - Welding Qualifications
Volume 3 - *CASTI* Guidebook to ASME B31.3 - Process Piping
Volume 4 - *CASTI* Guidebook to ASME Section VIII Div. 1 - Pressure Vessels

CASTI Handbook Series™

Volume 1 - *CASTI* Handbook of Cladding Technology
Volume 2 - *CASTI* Handbook of Stainless Steels & Nickel Alloys
Volume 3 - *CASTI* Handbook of Corrosion Control in Soils

CASTI Self-Study Series™

Volume 1 - *CASTI* Self-Study Guide to Corrosion Control

CASTI Engineering CD-ROM Series™

CASTI's 100 Best Engineering Shareware CD-ROM

We Would Like To Hear From You

Our mission at *CASTI* Publishing Inc. is to provide industry and educational institutions with practical technical books at low cost. To do so, the book must have a valuable topic and be current with today's technology. *The Metals Blue Book*™ - Welding Filler Metals, 2nd Edition, is the third volume in *The Metals Data Book Series*™, containing over 600 pages with more than 500,000 pieces of welding filler metal data. Since accurate data entry of more than 500,000 numbers is contingent on normal human error, we extend our apologies for any errors that may have occurred. However, should you find errors, we encourage you to inform us so that we may keep our commitment to the continuing quality of *The Metals Data Book Series*™.

If you have any comments or suggestions we would like to hear from you:

CASTI Publishing Inc., 10566 - 114 Street
Edmonton, Alberta, T5H 3J7, Canada
tel: (780) 424-2552, fax: (780) 421-1308
e-mail: casti@casti.ca

Browse Through Our Books On The Internet

You can browse through our electronic bookstore and read the table of contents and selected pages from each of our books. You can find our home page at http://www.casti.ca.

Contents

SECTION I WELDING METALLURGY

CHAPTER 1 INTRODUCTION TO WELDING 1

CHAPTER 2 BASIC METALLURGY FOR WELDING 17

CHAPTER 3 FLAWS & DEFECTS IN THE WELD ZONE 33

CHAPTER 4 CARBON STEELS 51

CHAPTER 5 ALLOY STEELS 69

CHAPTER 6 STAINLESS STEELS 79

CHAPTER 7 CAST IRONS 95

CHAPTER 8 NICKEL ALLOYS 103

CHAPTER 9 REACTIVE & REFRACTORY ALLOYS 109

CHAPTER 10 ALUMINUM & MAGNESIUM ALLOYS 117

CHAPTER 11 OTHER METALS AND ALLOYS 121

CHAPTER 12 INTERNATIONAL WELDING FILLER METAL DESIGNATION SYSTEMS 125

SECTION II WELDING DATA

CHAPTER 13 CAST IRON FILLER METALS
AWS A5.15 142

CHAPTER 14 CARBON & LOW ALLOY STEEL FILLER METALS
AWS A5.1 148
AWS A5.2 158
AWS A5.5 160
AWS A5.17 175
AWS A5.18 180
AWS A5.20 186
AWS A5.23 190
AWS A5.25 201

SECTION II WELDING DATA (Continued)

CHAPTER 14 CARBON & LOW ALLOY STEEL FILLER METALS (Contined)
AWS A5.26 206
AWS A5.28 212
AWS A5.29 218

CHAPTER 15 STAINLESS STEEL WELDING FILLER METALS
AWS A5.4 230
AWS A5.9 236
AWS A5.22 242

CHAPTER 16 ALUMINUM & ALUMINUM ALLOY WELDING FILLER METALS
AWS A5.3 250
AWS A5.10 252

CHAPTER 17 COPPER & COPPER ALLOY WELDING FILLER METALS
AWS A5.6 260
AWS A5.7 264

CHAPTER 18 MAGNESIUM ALLOY WELDING FILLER METALS
AWS A5.19 268

CHAPTER 19 NICKEL & NICKEL ALLOY WELDING FILLER METALS
AWS A5.11 274
AWS A5.14 278

CHAPTER 20 TITANIUM & TITANIUM ALLOY WELDING FILLER METALS
AWS A5.16 284

CHAPTER 21 TUNGSTEN & TUNGSTEN ALLOY WELDING FILLER METALS
AWS A5.12 288

CHAPTER 22 ZIRCONIUM & ZIRCONIUM ALLOY WELDING FILLER METALS
AWS A5.24 292

SECTION II WELDING DATA (Continued)

CHAPTER 23 SOLID & COMPOSITE SURFACING FILLER METALS
AWS A5.13 294
AWS A5.21 303

CHAPTER 24 CONSUMABLE INSERTS
AWS A5.30 306

CHAPTER 25 BRAZING FILLER METALS & FLUXES
AWS A5.8 314
AWS A5.31 327

CHAPTER 26 WELDING SHIELDING GASES
AWS A5.32/A5.32M 332

CHAPTER 27 LIST OF INTERNATIONAL FILLER METAL STANDARDS 336

CHAPTER 28 EUROPEAN DATA (EN)
CARBON & LOW ALLOY STEEL FILLER METALS
EN 440 346
EN 499 349
EN 756 353
EN 757 358
prEN 758 363
prEN 1599 368
prEN 12070 372
prEN 12071 375
prEN 12535 379

CHAPTER 29 EUROPEAN DATA (EN)
STAINLESS STEEL WELDING FILLER METALS
prEN 1600 386
prEN 12072 392
prEN 12073 397

CHAPTER 30 INTERNATIONAL FILLER METAL CROSS REFERENCES
CARBON STEEL DATA 402
LOW ALLOY STEEL DATA 408
STAINLESS STEELS DATA 423
NICKEL ALLOYS DATA 433
ALUMINUM ALLOYS DATA 437

SECTION II WELDING DATA (Continued)

CHAPTER 30 INTERNATIONAL FILLER METAL CROSS REFERENCES (Continued)

CARBON STEEL CROSS REFERENCES 438
LOW ALLOY STEEL CROSS REFERENCES 444
STAINLESS STEELS CROSS REFERENCES 457
NICKEL ALLOYS CROSS REFERENCES 466
ALUMINUM ALLOYS CROSS REFERENCES 470

SECTION III WELDING TERMS

CHAPTER 31 GLOSSARY OF WELDING TERMS 499
ENGLISH/FRENCH/SPANISH 500
SPANISH/ENGLISH/FRENCH 548
FRENCH/ENGLISH/SPANISH 560

APPENDICES & INDEX

APPENDIX 1 HARDNESS CONVERSION NUMBERS FOR STEELS 573

APPENDIX 2 UNIT CONVERSIONS 583

APPENDIX 3 PIPE DIMENSIONS 589

APPENDIX 4 TECHNICAL SOCIETIES & ASSOCIATIONS LIST 595

INDEX 601

Chapter 1

INTRODUCTION TO WELDING

Before the scientific era, the joining of metals was usually accomplished without fusion of the parent metal. Metals were fabricated in ancient times by riveting, brazing, soldering, and forge welding. None of these techniques involved melting of the metals that were joined.

Welding on an atomic scale, in the absence of melting, is prevented by the surface oxide layers and adsorbed gases present on virtually all metals. In the absence of such films, or via disruption of the film, intimate contact of the surfaces of two pieces of metal will cause welding of the two pieces into one. Very little pressure is required for truly clean metals. Welding can be accomplished by cleaning the surfaces to be joined in a hard vacuum (to prevent reoxidation). An alternative is to deform the metal mechanically while the surfaces to be joined are in contact, which causes the brittle oxide layer to break. Clean metal is exposed which will bond on contact. This is how forge welding is accomplished. Fluxing may assist in disrupting and dispersing the surface contaminants. Sand fluxes surface oxide in the forge welding of iron.

Welding involving melting of the parent metal requires the attainment of quite elevated temperatures in a concentrated area. This requirement is the primary reason why it took until nearly the dawn of the 20th century for fusion welding to appear. The precursors of fusion welding, namely brazing and soldering, involve the fusion of a filler metal which melts at a temperature *below* the bulk solidus of the parent metal and flows via capillary action into a narrow gap between the parent metal sections. It then solidifies to complete the joint. Soldering, initially using tin and tin-lead alloys, takes place at lower temperatures than does brazing; the American Welding Society arbitrarily differentiates between them at 450°C (840°F), leaving brazing as occurring from 450°C (840°F) up to near the melting temperature of the parent metal.

Processes using tin-based alloys in the lower temperature range are still referred to as soft soldering, probably because the filler metals are quite soft. Silver was one of the first brazing filler metals. Silver brazing takes

place at temperatures in excess of 700°C (1290°F). The process is often referred to as silver soldering, or hard soldering, rather than brazing. This type of confusing labelling is not uncommon in the joining field, and it is necessary to keep a wary eye open. Part of the reason for such confusion may be that science has only recently discovered joining technology, and this has resulted in the retention of some inaccurate terminology from earlier times.

The history of the joining of materials is a long one, but can be conveniently divided into three eras. Prior to 1880, only forge welding took place, along with soldering and brazing - a *blacksmith* era. From 1880 to 1940, many advances were made and true fusion welding was possible, but most of the advances were accomplished by invention and inspired empirical observation. From 1940 to the present, scientific principles have played a significant role in the advancement of welding technology. The present emphasis on quality assurance and automated welding, including the use of robots, depends on the use of many scientific and engineering disciplines.

Welding metal together, without the use of a low melting filler metal, requires clean surfaces to allow atomic bonding. Mechanical deformation of two surfaces just prior to forcing the surfaces together disrupts the brittle oxide layer, exposing virgin metal and allowing pressure to weld the metal together. The first known joining of this type involved hammer welding of gold, which does not oxidize significantly, and therefore will readily weld to itself in the solid state with a little mechanical encouragement at ambient temperature. Gold also has a very low yield stress and is very ductile - it was and is regularly beaten into foil only 0.1 mm (0.004 in.) thick. Gold is now routinely welded by heating in a neutral (non-oxidizing) flame at relatively low temperature in order to remove adsorbed surface gases before pressure welding. Other precious metals are not as easy to pressure weld, because the surface oxides interfere with bonding of the metal atoms and higher yield stresses make large one-step deformation difficult.

Thus ferrous metals were not readily welded because of the tendency of iron to oxidize rapidly and also because of its high melting temperature and relatively high yield strength. The early welding of iron was probably accomplished in the solid state via hammering at high temperature, which in time has led to forge welding. This is still used for decorative iron work today. In forge welding, silica sand is used as a flux to remove oxide from the interface. Iron is one of the few metals whose oxide melts at a lower temperature than the pure metal, 1378°C (2500°F) and 1535°C (2800°F) respectively, providing the basis for at least some self-fluxing during heating. Adding silica sand forms iron silicates, which melt at

even lower temperatures than the iron oxide. The main problem in the early days was achieving a temperature high enough to allow simultaneous flux/oxide melting and sufficient and easily accomplished deformation.

Early iron was smelted at about 1000°C and hammered at that temperature to consolidate the bloom. The yield stress of wrought iron is about 200 MPa (30 ksi) at ambient temperature, but drops to about 20 MPa (3 ksi) above 1000°C (1830°F). The appropriate temperature for welding is in the range of 1000-1200°C (1830-2190°F), which is possible in a blown charcoal fire. The melting point of the slag inclusions in iron is probably above 1000°C (1830°F), since it is largely fayalite orFe_2SiO_4 which melts at 1146°C (2050°F). The joining of iron by the forge or hammer welding process developed empirically until eventually quite large fabrications could be made by skilled artisans. Examples are stern plates of over 25 tonnes (28 tons) for ships. Total deformations of up to 30-35% were used. An identical process produced a propeller shaft which weighed more than 30 tonnes (33 tons) for Isambard Kingdom Brunel's "Great Eastern".

The appearance of steel in large quantities during the 19th century made life somewhat more complicated, since very little slag is present (in comparison with wrought iron), and only very skilled forge welders could join it without significant numbers of flaws appearing in the completed joint. Sand fluxing minimized the problem on small fabrications, but not in large ones, where total deformations were smaller and the risk of slag inclusions was greater. Steel, or carburized wrought iron, had traditionally been difficult to make with sufficient hardness and toughness together.

The history of scientific contributions to welding is quite recent and fairly short. The scientific development of welding processes was not common until the middle of the 20th century, but scientific investigations started much earlier. The use of electricity to weld metals together began with two of the foremost practical geniuses in scientific history, Sir Humphrey Davy and his student, Michael Faraday. In the first decade of the 19th century, Davy investigated the nature of electricity. At one point, he touched two carbon electrodes together and passed a current through them from a large battery. When the electrodes were drawn apart, the current jumped the gap, forming an electrical discharge. Its path from one electrode to the other was curved, not straight, hence the name *arc*. Faraday was involved in the derivation in 1831 of the principles required to make electric power sources. The introduction of practical generators and motors had to wait about 50 years between scientific principle and technological application. In 1856, Joule suggested the possible use of

by radiation, convection and conduction through gas and slag shielding media, less than 100% efficiency of energy transfer to the weld zone occurs.

$$\text{HEAT} = \frac{x \bullet \text{Volts} \bullet \text{Amps}}{\text{Welding Speed}}$$

where x = efficiency factor (typically between 40% and 95%).

However, for most welding procedures it is difficult to measure "x" reliably and all normal welding procedures are written without using a "x" factor, i.e. it is assumed to be 100%. In the SI system of units, the heat input is determined by measuring the welding speed in millimeters/second. Then the result is in Joules/mm, or if divided by 1000, kJ/mm. This is the most universally used description of heat input. Typical values for arc welding range from 0.1 to 10 kJ/mm (2.5-250 kJ/in).

Heating Rate

The effects of the rapid temperature rise during the initial heating cycle in welding have not been analyzed extensively, but do have some important implications. The most important is that any existing segregation of alloy elements or impurities in the base metal will not be evened out by diffusion, because the time available is too short. This can lead to a local region in the base metal right next to the fusion line where localized melting can occur. This is most likely where previous segregation in the base metal exists, for example at grain boundaries. These regions may contain higher than average concentrations of alloying elements and/or impurities, which cause a lowering of the melting temperature. The region is therefore called the Partially Melted Zone (PMZ). This localized, restricted area of melting may simply solidify again as the temperature falls after welding, or it may open up under stress to form a small crack, usually known as a liquation crack.

Peak Temperature

The high peak temperatures reached in welding (near or above the melting temperature of the base metal) are far in excess of temperatures in conventional heat treating processes. There are two major results:

1. Grain sizes in the heat-affected zone (HAZ) are large and are largest next to the fusion line at the weld metal. This increases hardenability in transformable steels and may concentrate impurities which are segregated to grain boundaries. This may lead to a form of hot cracking.

2. All traces of work hardening and prior heat treatment (e.g. tempering, age hardening) will be removed in at least part of the HAZ and the size of the region affected will be larger as the heat input rises.

Cooling Rate

The rapid cooling cycles for welding after solidification is complete are caused by the quenching effect of the relatively cold parent metal, which conducts heat away from the weld zone. Models involving the Laplace equation have been developed to predict cooling rates, but are beyond the scope of this book. Discussion of this equation and the developed models can be found in other publications.

However, the cooling rate must be evaluated, since important weld zone properties such as strength, toughness and cracking susceptibility are affected. As the cooling rate increases, i.e. as the temperature falls more rapidly, several important welding effects occur. In transformable metals, such as ferritic-martensitic steels or some titanium alloys, the high temperature phase in the weld metal, and particularly in the HAZ, is quenched. Since the actual cooling rate experienced at a given point varies with location and time after welding, some characterization is necessary. The most used technique is assessment of welding procedure tests, but this is expensive and not particularly useful in predicting the effect of changing variables such as heat input. In the welding of steels, the time spent dropping through a temperature range characteristic of transformation of austenite to martensite or other transformation product (e.g. bainite, ferrite + carbide) is becoming a standard test. The characteristic time is measured in seconds for a given weld metal or HAZ region to drop from 800 to 500°C (1470-930°F) and is often written as Dt_{8-5}. A large number signifies a slow cooling rate.

If weld zone properties are not as desired, it is possible, in some cases, to improve them by altering the cooling rate in the welding procedure. Two main methods are used. The first is heat input - higher heat input in a given situation slows down the cooling rate. Preheating, by warming the base material before welding, also slows down the cooling rate, with higher preheat leading to slower cooling rates. Combining preheat and heat input variations is called *Procedure Control*. Further control of cooling rate effects can be included in a welding procedure by defining a value for interpass welding temperature in multipass welding (effectively a preheat value for each succeeding pass), in order to ensure a cooling rate within a given range or 'window'. This idea will be revisited in discussions on welding various grades of steel.

Metallurgical Effects Of The Welding Thermal Cycle

Weld Metal Solidification

Solidification of weld metal takes place in an unusual manner in comparison with castings. The molten weld pool is contained within a *crucible* of solid metal of similar chemical composition. Since the melting temperature of the base metal is reached, the fusion line and adjacent HAZ experience very high temperatures for a short time. The result is rapid grain growth. These large grains act as nuclei and the weld metal solidifies against them and assume the crystallographic orientation of the atomic structure in the large HAZ grain. Only the grains with an orientation giving rapid growth into the weld metal produce dendrites, and the result is called *epitaxial growth*. There is a very thin region of melted base in the weld metal right next to the fusion line which, although 100% molten, is not stirred into the bulk of the molten pool during welding, due to viscous effects during mixing. This region is called the Melted Unmixed Zone (or MUZ) and is usually very narrow, typically 0.1 mm (0.004 in.) wide.

Since diffusion has not enough time to even out any differences with the weld metal chemistry, any segregations in the base metal will persist in this region. It is also a region in which any segregation produced in the weld metal may collect in a static region and also persist. Initial growth during solidification into this region is often planar, and cellular growth occurs as the growth rate increases. True columnar growth and dendrites form as faster growth continues in the bulk of the weld metal. As growth of dendrites proceeds into the molten weld pool, segregation of some of the alloy and residual elements in the weld pool occurs as the forming solid rejects some of the elements into the liquid due to a lower solubility in the solid state. As a result, the remaining liquid near the end of solidification can contain significantly higher levels of some elements. This can lead to the formation of cracks and fissures in the weld metal. One example is the concentration of S, P, O and C at grain boundaries in many ferrous and nickel alloys, which alone, or together with themselves and other elements, can form complex eutectics of low melting temperatures.

Growth of dendrites tends to follow the direction of heat flow, generally perpendicular to the freezing isotherm at a given instant and moving toward the welding heat source as it traverses the joint line. Consequently, at slow welding speeds, dendrites curve to follow the advancing solidification front in the elliptical weld pool. At high welding speeds, the pool is an elongated teardrop shape, and dendrites tend to grow straight toward the weld centreline. Thus any hot cracks formed at high welding speeds tend to be right down the centreline of the weld,

Chapter 3

FLAWS & DEFECTS IN THE WELD ZONE

The two main weldment zones are the weld metal, which is composed of melted base metal and (if present) filler metal and the other is the Heat-Affected Zone (HAZ), which is solely base metal which has been heated sufficiently to affect the properties of the base metal. These can be mechanical properties (strength, toughness), metallurgical (microstructure, grain size) or physical properties (hardness, electrical conductivity). The visible HAZ is made visible by metallurgical etching. The peak temperature experienced by the HAZ increases as the fusion line at the weld metal is approached. At distances well removed from the fusion line, outside the visible HAZ, there is also a region affected by lower peak temperatures experienced in the thermal cycle. This is called the non-visible HAZ, in which more subtle effects, such as changes in some physical properties, occur. Problems associated with welds in the weld metal and HAZ are caused by procedural (welding process) or metallurgical shortcomings. We will be concerned primarily with metallurgical problems, but some definition of the differences between process and metallurgical induced flaws is necessary, as is some definition of what a defective weld is.

Codes of fabrication and other welding documents use several words interchangeably to describe unacceptable areas in welds. The four most common are *imperfection*, *discontinuity*, *flaw* and *defect*. Before fracture mechanics were available and the concept of Fitness-for-Purpose did not exist, the use of any of these words to describe a problem region was acceptable. Now, however, such imprecision can lead to difficulties in interpretation, and some rationalization is called for. Let us try the following definitions of these words:

Imperfection/Discontinuity

Metallurgically, an imperfection is any lack of regularity in a three-dimensional lattice of atoms. In a metal, anything from a vacancy or

dislocation to larger regions such as a grain boundary would qualify. The term discontinuity is better applied to a collection of imperfections (for example a grain boundary) which is normally undetectable by conventional inspection and non-destructive testing techniques. Neither an imperfection nor a discontinuity should be of concern in a material or fabrication. Many fabrication Codes and Standards use these words to describe large problems, such as cracks, which must be repaired.

Flaw

A flaw is a discontinuity detectable via destructive or nondestructive testing which is not likely to cause failure of the structure in the prevailing conditions. It can therefore be left in the structure without repair, if validated by fracture mechanics analysis. Some NDT techniques (RT,UT) can detect such innocuous flaws as grain boundaries in certain alloys, so some care is necessary in interpretation.

Defect

A defect is a flaw which is likely to cause structural failure under prevailing or anticipated operating conditions. It is also any flaw prohibited by a fabrication code or a customer specification. A given discontinuity may be a flaw in one structure, but a defect in another. ECA (Engineering Critical Analysis) involving fracture mechanics can help distinguish between flaws and defects. Otherwise, arbitrary workmanship criteria are used (a fixed size and/or type of flaw is a defect in all circumstances). Preventive maintenance is cheaper than catastrophic failure or replacement, so regular inspection is a required backup to ECA.

A somewhat cynical, but useful, engineering view is that all materials and fabrications are collections of imperfections. An acceptable material or fabrication is an organized or accidental collection of flaws suitable for a specific application (fitness-for-purpose). Scrap material, a fabrication requiring repair, or a scrapped fabrication, are unfortunate or unlucky collections of defects for a particular application.

Flaws and defects in a weld region can be two dimensional (e.g. cracks) or three dimensional (e.g. porosity). As a general rule, two dimensional flaws are at once more dangerous and more difficult to detect and are therefore more important, despite what some codes say about porosity. However, keep in mind that both two and three dimensional flaws cause stress concentrations (important for dynamic loading) and that extensive porosity can be indicative of a poor weld which may contain other, more dangerous, flaws.

Typical flaws caused by welding process and procedure problems are the following:

Two dimensional	
Lack of Penetration	inadequate heat input for joint configuration
Lack of Fusion	inadequate melting of base metal
Three dimensional	
Porosity	from poor shielding (atmospheric interaction), poor quality shielding gases
Undercut	from poor welding technique
Excess reinforcement	too much weld metal
Excess penetration	high heat input

Typical flaws caused by welding metallurgy problems are the following:

Two dimensional	
Cracks	from solidification and high temperature ductility problems and/or low temperature problems
Three dimensional	
Porosity	from reactions with shielding gases or slags from rapid decrease in gas solubility as liquid cools or liquid freezes to solid

Residual Stress

Because the formation of a weld zone takes place in a small region of a welded structure, the heating of the material is non-uniform. Solidification of the weld metal and the cooling of the weld zone to ambient temperature causes shrinking for nearly all metals, and virtually all commonly welded metals. Shrinkage during freezing is about 4-7% and shrinkage during cooling to ambient is lower, but of similar magnitude. Since the shrinkage is localized, residual stresses are developed in the completed structure. These residual stresses are at the yield point in tension in both the axial and transverse directions. The actual magnitudes and distribution depend to some extent on thickness and restraint, especially in the transverse orientation. These levels of tensile stress can contribute to flaw development, such as cracking, and often need to be countered by stress relieving postweld heat treatment

(PWHT). After PWHT, residual stresses are reduced to about 15% of the original value transverse to the weld and 30% in the axial direction.

Cracking In Welds

The combination of gas and slag-metal reactions, segregation effects, including solidification and grain growth, and residual stress can lead to the formation of flaws in the weld metal and HAZ. Porosity can result from solubility changes or chemical reactions as temperature drops, but the most dangerous flaws are two-dimensional cracks. These can be formed at elevated temperatures, loosely associated with the solidus temperature of the bulk alloy, or at roughly ambient temperature or slightly above. These phenomena are called hot cracks and cold cracks respectively.

Hot Cracking

Hot cracking occurs at elevated temperatures. Most discussions of hot cracking in weld zones concentrate on cracking involving some molten component, and is often referred to as solidification cracking. However, it is more scientific to refer to hot cracking as a flaw which occurs when temperatures are high enough to affect the visible microstructure, and we will take this as the recrystallization temperature or a phase transformation temperature. Recrystallization usually occurs at 0.3 to $0.5T_m$, where T_m is the melting temperature of the metal in degrees absolute. This may be high or low compared to ambient temperature, depending on the metal. In lead alloys, the recrystallization temperature is below 20°C (68°F), while in refractory metals, for example tungsten, it is well over 1000°C (1830°F). Thus *hot* cracking is a relative term.

While most hot cracks form at or near the solidus of the bulk metal in either the weld metal or the HAZ, there are other types of cracks which form at lower temperatures, down to about $0.5T_m$, which are also hot cracks. Cracks which occur in the weld metal as it solidifies are called *solidification cracks*. These may involve elements deliberately added (intrinsic elements) or impurities (extrinsic elements). They are called macrocracks if visible to the naked eye, microcracks if smaller. Cracks may also form in the weld metal and the HAZ at temperatures just below the bulk solidus in each region, primarily due to segregation of alloy or impurity elements which depress the solidus locally. The resulting liquid films on the dendrite or grain boundaries cause cracks to form in a region of otherwise solid metal. In the weld metal these are often called *hot tears or fissures*, and in the HAZ *liquation cracks*. At lower temperatures, local embrittlement can cause *ductility dip cracks* and certain heating conditions after welding can lead to *reheat cracks* in the HAZ. *Temper*

Temper Embrittlement

Temper embrittlement is caused by the segregation of P, and to a lesser extent by Sn, As and Sb, to prior austenite grain boundaries during heat treatment or high-temperature service at temperatures <500°C (930°F). Cr and Ni tend to promote segregation, while Mo tends to minimize it. In the HAZ region of welded structures, it also appears that Mn and Si promote segregation in the HAZ. In weld metals, Mn is also a problem at levels in excess of only 0.10%. The suggested method to minimize cracking is to keep Mn and Si as low as possible. Mn can be held to about 0.5% in Cr-Mo steels, but not less. Si is also a problem to limit in weld metals, due to the need for deoxidation. The preferred method in modern steels is to limit P to less than 0.010%, or even 0.005%. It is not metallurgically feasible to reduce Sn and especially As and Sb, to levels lower that the ppm levels at which they appear now. Scrap containing Sn can be limited to other steels which are not exposed to conditions which promote temper embrittlement. There have been a few empirical rules derived to minimize the probability of temper embrittlement in weld zones, for base plates (HAZ) and the weld metal in Cr-Mo and Cr-Mo-V steels, which will be given in detail in Chapter 5 on Alloy Steels.

Chapter 4

CARBON STEELS

Carbon Steels

Carbon steels, or Carbon-Manganese (C-Mn) steels are alloys of carbon, manganese and iron dominated by the solid state eutectoid reaction at 0.8%C. General metallurgical information on these alloys is given in *The Metals Black Book* - Ferrous Metals. Related AWS Filler Metal Specifications are A5.1, 5.2, 5.17, 5.18, 5.20, 5.25 and 5.26. Carbon levels are in the range up to about 1.2%C maximum. Manganese is always present to control sulphur and prevent hot cracking. Steels may contain up to 2%Mn before it is considered a separate alloying element.

Structural Steels

Modern structural steels are largely Carbon-Manganese (C-Mn) or low alloy steels. C-Mn steels used for structures and machinery typically contain up to about 0.50% carbon, 1.7% manganese, 0.6% Silicon and occasionally a small amount of aluminum for grain size refinement. No other deliberate alloying elements are added, but chromium, nickel, molybdenum, copper and columbium can be present as residual elements.

In a given steel, the maximum achievable hardness in a severe quench (high cooling rate) is determined almost exclusively by the carbon content. The ability of the steel to achieve that maximum hardness is dependent on the cooling rate and the alloy content. Most alloying elements tend to diminish the rate of diffusion of carbon, which tends to promote lower temperature transformation products and thus increases hardenability, which describes how easily the steel can achieve maximum hardness in a section. The Jominy endquench hardness test is often used to assess this behaviour. Jominy data is often correlated with an Isothermal Transformation diagram (or Time-Temperature-Transformation diagram), which shows which transformation products occur for a steel cooled rapidly from about 900°C (1650°F) to a specified lower temperature, which temperature is then held until a transformation occurs. This does not happen often in practice, especially in welding,

1. Very good low hydrogen, the best available, is < 5 ppm.
2. Good low hydrogen conditions are 5-10 ppm
3. Medium levels are 10-20 ppm
4. High hydrogen conditions are > 20 ppm.

The maximum levels produced are in the order of 60 ppm for cellulosic SMAW electrodes. The maximum solubility of atomic hydrogen in ferrite at ambient temperature is about 6 ppm, so significant supersaturation is easily obtained by the time the weld zone has cooled.

The carbon equivalent for C-Mn steels uses the IIW equation for entering the nomogram. This is a slightly modified version (1967) of the original equation determined earlier by Dearden and O'Neill:

1. IIW

$$CE = \%C + \frac{\%Mn}{6} + \frac{\%Cr + \%Mo + \%V}{5} + \frac{\%Cu + \%Ni}{15}$$

Because the original equation was determined on a relatively limited set of steels which were characteristic of the steelmaking processes of the time (relatively high carbon, sulphur and oxygen), some modern steels may not conform well to predictions based on the IIW equation. Conservative estimates may be calculated by adding a term for silicon:

2. IIW (current)

$$CE = \%C + \frac{\%Mn}{6} + \frac{\%Si}{6} + \frac{\%Cr + \%Mo + \%V}{5} + \frac{\%Cu + \%Ni}{15}$$

The IIW equations work well for steels of moderate to high carbon levels, above about 0.15%. For lower carbon steels there is no agreed format to determine CE.

Once the combined thickness, hydrogen level and carbon equivalent are determined, the nomogram is entered at the appropriate point on the CE lines at the lower left. There are two ways to proceed. A heat input may be chosen at the lower right, and a vertical line taken to the combined thickness. A horizontal line is then traversed to the left, to intersect with a vertical line drawn upward from the appropriate CE/diffusible hydrogen entry. The intersection determines the required preheat. Alternatively, if a particular preheat is desirable (to provide welder comfort), the intersection of the vertical line from the CE entry with the appropriate preheat is traversed horizontally to the right to intersect with the combined thickness. A vertical drop then determines the required heat input, which may be achieved by any appropriate combination of voltage, current and welding speed. The use of a derived preheat/heat input

Chapter 5

ALLOY STEELS

Alloy steels contain deliberate additions of one or more elements to modify the corrosion resistance, creep resistance, wear resistance, strength and/or toughness. Low alloy steels contain less than 5-6 wt% total alloy additions (again not including manganese and silicon), usually of chromium, nickel, molybdenum and vanadium. Some information states an upper level of 6%, but many modern alloys exceed that level and are still included in the low alloy classification. Examples are the high end of the Cr-Mo range (9%Cr-1%Mo) and the cryogenic Ni steel range (9%Ni). Alloy steels usually contain < 10% total alloy element content, not including C and Mn, but some exceed this level, for example, the austenitic manganese Hadfield steel, which contains 13%Mn, or the maraging steels, which contain 18%Ni plus deliberate additions of Mo, Ti and Cb. General metallurgical information on these alloys is given in the *CASTI Metals Black Book* - Ferrous Metals. Related AWS Filler Metal Specifications are A5.2, 5.5, 5.23 and 5.25, 5.26, 5.28 and 5.29.

The approach taken in this chapter will be to discuss the welding metallurgy of a few alloy steel systems, since it is not possible to give details for all of the alloy steels which are welded. The systems chosen will illustrate the fundamental aspects of welding metallurgy which apply in total or in part for any alloy steel.

Alloy steels are more hardenable than C-Mn and microalloyed steels. The main concerns in the HAZ are toughness, which can be reduced by a combination of large grain size and martensitic transformations, and HAC. Many alloy steels are in Zone III of the Graville Diagram, and as a result, need Procedure Control and PWHT to avoid HAC and optimize the strength/toughness ratio. In many cases, especially if carbon content is high, it is advisable to maintain the preheat until PWHT can be carried out, so that martensite is not formed in the weld area before PWHT.

Weld metals have their major problems with strength/toughness balance, HAC and, in some cases, hot cracking. As strength level increases, toughness tends to decrease. There are three ways to improve fracture

toughness at a given strength level: reduce grain size, reduce inclusion population, and add nickel.

Average grain size is difficult to reduce in cast materials without using nucleants of some kind, and these are often inclusions. Therefore, if enough suitable inclusions are available to refine as-cast microstructures, the weld metal inclusion population is sufficient to decrease toughness. One method used to overcome this conundrum is *Temper Bead Welding*, which is a procedural device to maximize the amount of weld metal and prior HAZ which is grain refined by the heat input of the following passes in a multipass welding procedure. The procedure requires strict control of the heat input and size of each layer of weld (which may be one or more individual passes). The aim is to grain refine at least 80% of the previously deposited weld metal. The last pass is placed at ½ a pass width inside the fusion line to grain refine as much as possible of the final layer. This technique is used on repair welding of steam piping in power stations, where no PWHT is possible.

To reduce the inclusion population, welding processes involving non-inert gases and most fluxes cannot be used on high strength steels. Oxidation or reactions between weld metal deposits and gases or slags causes inclusion populations to rise. The processes of choice for the highest strength alloy steels are therefore GTAW and GMAW, with some use of EBW and LBW, with either vacuum or inert gas shielding.

HAC in weld metals is more of a problem in alloy steels than it is in C-Mn steels, especially High Strength Low Alloy (HSLA) steels. One reason for this is the higher susceptibility of as-cast microstructures, with large grain sizes and inherent alloy element segregation. Another is the failure of electrode compositions to keep pace with advances in base metal chemistry and the nature of producing the alloy steel weld metal deposits. The best situation exists for GTAW and GMAW processes, with some advances being made in FCAW with metal powder cores. These processes use electrode wires of similar alloy composition and cleanliness as the base metal, and do not oxidize or contaminate the weld metal with inclusions. Processes such as SMAW often add alloying elements as ferroalloys in the flux, using core wires made of plain carbon steels. Microsegregations and impurity elements are not as well controlled, which leads to the weld metal in some of these steels being more prone to HAC than is the HAZ, the opposite of the situation with C-Mn steels.

Nickel additions are made to many low alloy welding electrodes to improve toughness. Up to 5% is used in HSLA grades, and cryogenic steels have electrodes containing up to 12%. The exact reason for the improvement of ferritic (martensitic) alloy toughness with Ni used as a

Chapter 6

STAINLESS STEELS

All stainless steels contain 11.5% or more Cr and often contain significant amounts of other alloying elements such as Ni and Mo. Modern 'super' stainless steels have many other alloying elements added for specific properties and may contain less than 50%Fe. General metallurgical information on these alloys is given *The Metals Black Book* - Ferrous Metals. Related AWS Filler Metal Specifications are A5.4, 5.9 and 5.22.

Stainless steels earned their name from steels evolved from early 20th century experiments on alloying, carried out mainly in England. It was observed that high Cr steels did not rust even when exposed to rain, and they were dubbed *stainless*. The early alloys contained levels of carbon sufficient to make martensitic transformation on cooling inevitable, so the early experimental steels were very brittle and essentially useless. When steels with more controlled carbon levels were made, a new family of steels was born. Although stainless due to the continuous layer of Cr oxide on the surface, these steels are not corrosion proof and can fail catastrophically in certain environments. Welding tends to make the situation worse in some instances. The alloys are also oxidation resistant at elevated temperatures. The welding metallurgy of these steels is discussed below starting with the simplest alloys, the original martensitic grades. This is followed by the increasingly more complicated grades; ferritic, austenitic, duplex, precipitation hardening and 'super' stainless steels. Since there are so many types of stainless steel, they are used for an enormous range of applications, including corrosion resistance, creep resistance, anti-magnetic applications, cryogenic applications and high strength applications. The alloying elements in stainless steels are classified as austenite stabilizers (C, Ni, Mn and N, but occasionally Cu and Co) or ferrite stabilizers (Cr, Mo, Si, Cb and many others). The balance between these competing austenite and ferrite stabilizing elements determines the microstructure of a given stainless steel.

Martensitic stainless steels contain between 11.5 and 18%Cr and from 0.12 to 1.2%C. Particular grades have some other small alloy additions, e.g. Ni and Mo. They are usually in a hardened and tempered condition,

Chapter 7

CAST IRONS

Cast irons are iron-carbon alloys dominated by the eutectic reaction at about 4.3%C. They contain > 2%C, significant amounts of Si, P and S in many cases, and can have large amounts of deliberate alloy additions for specific purposes, for example Cr, Ni, Si, Mo and Cu. General metallurgical information on these alloys is given in *The Metals Black Book* - Ferrous Metals. The related AWS Filler Metal Specification is A5.15.

Metallurgy Of Cast Irons

Cast iron is essentially pig iron from the blast furnace, whose composition has been modified by remelting and adding steel scrap and/or specific alloying elements in the form of ferro-alloys, e.g. ferro-silicon. A typical cast iron contains 3.0-3.8%C, 1.5-3.0%Si, 0.3-1.0%Mn, 0.05-0.25%P and 0.02-0.15%S. The high C and Si contents are a natural result of the blast furnace process. The actual concentration of these elements is important in determining the structure and properties of cast irons. Si, and other alloy and residual elements, modify the C-Fe phase diagram in two ways:

1. The C content of the eutectic and eutectoid are reduced (to 3.7% and 0.6% respectively at 2.0%Si).
2. The eutectic and eutectoid reactions are changed from invariant reactions at a single temperature to univariant reactions over a small range of temperatures.

Cast irons are significantly different from steels in microstructure as well as chemistry. Where steels have carbon in the form of carbide or dissolved in the matrix, cast irons have these and an additional phase - graphite. Although we tend to regard iron carbide in steels as an equilibrium phase, it is not. Given slow cooling rates during solidification or extended thermal treatments of solid cast iron, graphite will form directly or Fe_3C will transform to graphite and iron, which are the true equilibrium phases.

Chapter 8

NICKEL ALLOYS

Nickel alloys are of two types: solid solution alloys that can only be work hardened and precipitation hardened alloys. They are also intended for two application areas: resistance to corrosion and oxidation in specific media, or resistance to deformation (creep) and oxidation at high temperatures, as in jet engines. General metallurgical information on these alloys is given in *The Metals Red Book* - Nonferrous Metals. Related AWS Filler Metal Specifications are A5.11 and 5.14.

Nickel and its alloys have an *austenitic* face centered cubic crystal structure and, like austenitic stainless steel, have an aversion to sulfur. Hot cracking is therefore one of the major welding problems and all sulfur bearing compounds, oil, grease, paint, etc., must be scrupulously removed from the weld area. Temperature sensitive crayons used to be a prime culprit, but new formulations are sulfur free. Low melting point metals and alloys can also be a problem. Lead and bismuth and their alloys must be excluded from the weld zone. Silicon promotes hot cracking in some alloys, and minor additions of boron and zirconium can promote liquation cracking in the HAZ, particularly in the coarse grain region, where the minor elements collect on the grain boundaries.

Cleaning should be by vapor or solvent degreasing and by brushing with stainless steel brushes (not mild steel) for 25-50 mm (1-2 in.) outside the edge of the weld preparation. Repair welding of alloys which have been in service often requires more drastic cleaning. Grit or vapor blasting may be of help in this situation. Initial degreasing is often beneficial, by minimizing the risk of embedding grease, etc., in the surface during grit blasting or minimizing the contamination of wire brushes, which may transfer contamination to other surfaces.

Since many applications of nickel alloys involve corrosion, it is imperative that weld zones, both weld metal and HAZ, have equivalent or higher corrosion resistance, i.e. are cathodic to the base metal. If they are not, corrosion will concentrate on the weld zone, with catastrophic results in most cases. This problem is usually of more importance in the weld

metal. If any doubt exists for a particular application, contact the manufacturer of the alloy and/or of the proposed filler metal for information. There can be corrosion problems in addition to overall weld metal chemistry that are caused by precipitation of carbides and/or intermetallic compounds. The carbide problem is analogous to 'sensitization' in stainless steels. Many subtle changes in the composition of certain nickel alloys has been done over the years to minimize these problems. Fine tuning has produced, among others UNS N10276 (Hastelloy* C-276), UNS N06022 (Hastelloy* C-22) and UNS N06455 (Hastelloy* C-4) alloys, all variations on the original C theme alloy. For example, UNS N10276 was an early low carbon version to minimize carbide formation. Sensitization is best avoided by using low heat input and stringer passes for multipass welds in thicker material. The less time spent in the 500-850°C (930-1560°F) range, the better. The low carbon variations of the alloys are immune if low heat input is used. Another, significantly less desirable solution, is to anneal the fabrication after welding at a temperature high enough to dissolve the carbides, about 900-1000°C (1650-1830°F). This carries the risk of thermal distortion of complex structures and possible reprecipitation of carbides on cooling, so low carbon and low heat inputs are preferred.

Precipitates are also a problem in the welding of precipitation hardened alloys intended for creep resistance at high temperatures. Alloy fine-tuning has also been done on these alloys to minimize the precipitation of intermetallic phases (e.g. σ, μ & χ) which embrittle the material. The precipitate used for hardening is $Ni_3(Al,Ti)$ for the most part. This is a very stable precipitate which takes extensive heat treatment to form and is difficult to dissolve completely in the short time of the welding thermal cycle. Welding these alloys can cause strain-age cracking in the HAZ due to strain concentration during cooling after welding in the narrow zone which is overaged or partly solution treated. As a result, the alloys are normally welded in the annealed (solution treated) condition and the completed fabrication is hardened with a PWHT.

The third possible welding problem is porosity, generally the result of carbon being oxidized during welding or of nitrogen absorption. Virtually all filler metals for nickel alloys contain elements to deoxidize and denitrify the deposited weld metal to avoid porosity. These are usually Al, Ti and Cb. Hydrogen is often added to the argon shielding gas for GTAW procedures (about 10%H_2), which minimizes nitrogen porosity. GMAW procedures do not respond well to similar additions, where hydrogen can cause porosity on its own. GMAW gas mixtures should be argon without oxidizing gas additions (CO_2 or O_2), although helium can be added to aid in smooth bead formation. SMAW is the other common process used, in which porosity is not a problem if consumables are handled and stored

Chapter 9

REACTIVE & REFRACTORY ALLOYS

Reactive metals such as titanium and zirconium react with and readily dissolve the atmospheric gases oxygen, nitrogen and hydrogen at elevated temperature and as a result they become hardened and embrittled. Refractory metals do likewise, but are differentiated by very high melting temperatures and therefore by high application temperatures. They are also brittle at room temperature: examples are tungsten, tantalum, molybdenum and columbium alloys. General metallurgical information on these alloys is given in *The Metals Red Book* - Nonferrous Metals. Related AWS Filler Metal Specifications are A5.16 and 5.24.

Reactive Alloys

Welding of the reactive alloys requires isolation and protection from atmospheric gases above all other welding precautions. This can be accomplished at several levels, depending on the limit of contamination needed. Levels must be lowest for corrosion protection and may be slightly relaxed when only mechanical strength is required. Tough weld metals also require low contamination levels. Only inert gas processes should be used, with argon as the shielding gas. The dew point should be -60°C (-70°F) maximum. High purity argon or combinations of cold traps (for moisture) and hot traps (for oxygen and nitrogen) should be used in critical welds. GTAW is the best choice in most cases. GMAW should be treated with caution, due to the extra gas-metal reaction site at the electrode tip. EBW in vacuum, or argon shielded LBW are also used for some fabrications. The extent of reaction with atmospheric gases, notably oxygen, can be assessed by the colour of the weld zone after fabrication. The color indicates the thickness of the surface oxide layer, much like an oil film on a puddle of water shows differing colors in sunlight. A shiny, bright silvery, colour is ideal, but rarely achieved. A golden or straw colour indicates minimum contamination and good corrosion resistance. Various shades of blue, from light to dark, indicate thicker oxides and lower corrosion resistance. Purple, or worse yet, dull grey, oxides indicate significant contamination. The latter situation should not be tolerated for

Chapter 10

ALUMINUM & MAGNESIUM ALLOYS

General metallurgical information on aluminum and magnesium alloys is given in *The Metals Red Book* - Nonferrous Metals. Related AWS Filler Metal Specifications are A5.3, 5.10 and 5.19.

The welding metallurgy of aluminum and magnesium and their alloys is dominated by some shared characteristics. Both alloy systems melt at low temperatures, < 650°C (1200°F). This makes melting and welding fairly easy. Wrought alloys are welded best with inert gas shielded processes, GTAW, PAW or GMAW. Gases are pure Ar or Ar-He mixtures. Pure He can be used, but that is rare due to the cost and poor shielding efficiency (low density of the gas). Aluminum alloys of all compositions suffer mainly from hot cracking in the weld metal. There is some risk of liquation cracking in the HAZ, but it is quite unusual. Solidification cracks are minimized by choosing filler metal composition to avoid weld metal compositions close to the solid solubility limit of the primary alloying element(s) in the base metal. The 2xxx Cu alloys, the 7xxx Mg-Zn alloys and the 8xxx Li alloys give the most trouble.

For magnesium alloys, filler metals of similar chemical composition to the base metal are normal. Preheat is more common than it is with aluminum alloys, to help minimize residual stresses and therefore, weld metal cracking. PWHT is also more common, for the same purpose, and also for minimizing stress corrosion cracking in service.

The solubility of hydrogen is very high in the liquid compared to the solid in both aluminum and magnesium, with a ratio of about 50:1. The drop in solubility as temperature decreases is especially steep just above the melting temperature. This makes both alloy systems very prone to hydrogen porosity in the weld metal. The only remedy is to avoid hydrogen absorption during welding. It is essential to remove hydrocarbons such as oil and grease with solvent degreasing. It is also vital to avoid water on the surface of the metal, as a small amount can cause significant porosity, especially when welding outside. A preheat of about 50°C (120°F) is recommended to remove any condensation, even

though aluminum alloys do not normally require it. It is also useful to run an arc on a scrap piece of metal when welding is initiated after a long shutdown, for example overnight. This helps to clear any condensation in the inert gas shielding lines, which can also contribute to startup porosity.

Both aluminum and magnesium react with the atmosphere to produce tightly adherent refractory oxides that melt at high temperatures (> 2000°C or 3630°F) and protect the underlying metal against corrosion. The oxides do not melt during welding and have to be dispersed or removed from the weld area to ensure full fusion. This is usually accomplished by the use of alternating current with the GTAW process and electrode positive polarity in the GMAW process. In both cases, when electrons pass from the base metal to the electrode on electrode positive polarity, the oxide on the weld pool surface is disrupted in a process called cathode sputtering. There may also be some oxide disruption from argon positive ion bombardment of the weld pool surface. Prior to welding, mechanical cleaning of the surface is also important. Oxide thickness should be minimized by scratch brushing, but only with stainless steel brushes. Carbon steel brushes will leave small particles of steel embedded in the surface, which will corrode. Stainless steel particles will not. Stainless brushes, manual or powered, should be designated for Al or Mg use and kept separate from other cleaning equipment to avoid contamination, especially in a shop where metals other than aluminum are fabricated. The stainless steel brushing can also help minimize porosity, since thick oxide can be hydrated, especially after long storage times.

Aluminum Alloys

Wrought alloys are welded into many types of fabricated items, from electric bus bars to railway hopper cars. Non heat treatable alloys are separated from heat treatable grades for welding. If an aluminum to be welded has an unknown history and the chemical composition is not obtainable, the filler metal of choice is ER4043, containing 5%Si. Virtually any aluminum alloy can be welded satisfactorily without cracking using this filler metal, but optimum properties (mechanical, anodizing response) may not be achieved. Peak cracking tendency in Al-Si alloys occurs at only 0.5%Si, so a large amount of dilution will have virtually no effect.

The 1xxx *pure* aluminum series have the best electrical conductivity and corrosion resistance of all Al alloys. Bus bars need filler metals of similar purity, typically 1040 or better, to maintain electrical continuity. For commercially pure alloys of 1060 type and up, ER1100 is the normal choice. 3xxx grades with Mn are used in petrochemical and food

Chapter 11

OTHER METALS AND ALLOYS

In this chapter, copper alloys and some other alloys which are not often welded will be considered. Some metals and alloys which should not be welded will also be mentioned. For these materials, other joining methods are preferable, for example bolting, adhesive bonding or brazing/soldering. General metallurgical information on these alloys is given in the *CASTI Metals Red Book* - Nonferrous Metals. Related AWS Filler Metal Specifications are A5.6, 5.7 and 5.8.

Copper Alloys

For the most part, copper and its alloys can be welded, but they have some peculiar characteristics which need to be addressed. Pure copper and slightly alloyed coppers have very high thermal diffusivity and are difficult to melt, even with electric arcs. Copper dissolves significant amounts of oxygen, which forms a copper-copper oxide eutectic. If any hydrogen is absorbed during welding, large quantities of steam porosity form. Porosity is also a problem in Cu-Ni alloys. Free machining copper alloys contain a variety of additions to improve chip formation, including lead, bismuth selenium and sulphur. All cause significant problems with solidification cracking which cannot be addressed with filler metal modifications. Welding is not recommended. In brasses, zinc fuming can be a problem at levels of Zn in excess of 15%.

Pure copper comes in three types: tough pitch copper, phosphor deoxidized and oxygen free high conductivity copper. All have very high thermal diffusivity and are difficult to melt. Although oxy-acetylene procedures can be used, total heat levels can cause welder discomfort. SMAW electodes are also available, but the flux residue is corrosive, and gas shielded arc welding (GTAW, PAW or GMAW) is preferable. ERCu fillers are appropriate. Preheat can help, as can the use of shielding gas modifications to increase heat input. In argon shielded processes, there are a few options, and one definite prohibition. Helium can be added to about 50% in argon to increase heat input, as can up to 30% of the diatomic gas nitrogen. High levels of nitrogen can cause some porosity in

the weld metal. Hydrogen, which is also diatomic and is used to increase heat input for the welding of austenitic stainless steel, must not be used for tough pitch and nearly pure coppers due to the steam reaction with copper oxide. Deoxidation of the weld pool is also important to avoid porosity. Welding on phosphor deoxidized parent metal is best and filler metals often include deoxidants such as Mn, Si, Ti or Al. Ti and Al can also act as denitrifiers if Ar-N_2 shielding gases are used. High conductivity copper contains very low oxygen levels, and the main welding problem is loss of electrical conductivity in the weld metal due to the deoxidant additions. This conductivity loss can be minimized by using a special filler metal which is deoxidized with boron.

Brasses, i.e. alloys of copper and zinc, have low thermal diffusivity and can be arc welded easily with the GTAW process, as far as melting the alloy is concerned. Zinc fuming, however, is a problem that increases in severity as zinc content increases. Some relief can be obtained by using a phospher (tin) bronze (ERCuSn-A) or silicon bronze (ERCuSi-A) filler metals, or by welding in the overhead position, so that the weld metal recaptures the zinc fume. Brass filler metals (RCuZn) are available, but only for use with oxy-acetylene welding, not arc welding.

Alloys of copper and nickel are called cupronickels when copper rich. The most common compositions are 5-30% nickel. GTAW and GMAW processes are usual, using a similar filler composition, or the 30%Ni composition if not (ERCuNi). Thermal diffusivity is low, so fusion is easy. Since Ni is present, S and sulphur-bearing compounds must be excluded. Be wary of things like paint or crayon markings in the weld vicinity, and also of oil and grease. Lead contamination (from tooling) is to be avoided for the same reason.

Bronzes may be tin, silicon, or aluminum alloys of copper. All have low thermal diffusivity. Tin bronzes are rarely welded - if need be, phosphor or berylium bronze (ERCuSn-A) filler metal is used. Silicon bronzes can be easily welded using similar filler wire compositions, usually with inert gas shielded arc processes. High restraint may lead to hot cracking, so minimal restraint during fabrication is important. Aluminum bronzes are similar to Al alloys, in that the aluminum content is sufficient to form a continuous oxide film on the surface, which improves corrosion resistance. It also interferes with welding the same way, so inert gas processes, with alternating current for GTAW procedures, are mandatory. They are also similar to carbon steels, in that they can have a eutectoid reaction which can lead to martensitic transformation products and they can also be precipitation hardened. The composition for this behaviour is at approximately 9-10%Al. This alloy has low thermal diffusivity and excellent resistance to hot cracking in the weld metal using a similar

Chapter 12

INTERNATIONAL WELDING FILLER METAL DESIGNATION SYSTEMS

Introduction

Technical committees have long struggled with systems to identify materials in a consistent and logical manner. As new materials are brought to the market, the originator or the dominant producer identifies the product with its trade name. Names, such as "Monel," Stellite, Stainlend, Fleetweld, and many others, prevail for many years, even when additional producers of a comparable products make use of such names, often by reference in their product brochures. Differentiation of grades within a family are given letter or numeric designators following the established trade name; often these designators, like 800H, 347, 70-30, become well-known and widely accepted in industry. When specification committees seek consensus for designations, it is not uncommon to agree to use names and/or numerical designators which already prevail. When preparing specifications for multiple products within its scope, the adoption of designators then favor a consistent and logical system.

Many such systems occur in various national specifications. When specifications are cited in international trade, the designations sometimes become accepted in multinational markets. This has resulted in the use of the designations established in the filler metal specifications of the American Welding Society (AWS). The German DIN specifications have also been used in international trade and its designation systems are being suggested for use in ISO standards.

This section will consider the several designation systems and a method for making comparisons for similar products in national specification in many industrialized countries.

Identification of Filler Metals by Welding Processes

By far the greatest use of filler metals is for the various arc welding processes. The identification of the process usually appears in the definition of the scope and often in the title of the specification.

Most specifications include the covered electrodes for manual shielded metal arc welding (SMAW). Solid wires are generally used for gas metal arc welding (GMAW), gas tungsten arc welding (GTAW), and submerged arc welding (SAW). These processes also use composite (usually tubular) metal cored wires, similar to flux cored wires, but such wires contain no appreciable non-metallic ingredients, and thus are distinguished from the flux-containing tubular cored wires for flux cored arc welding (FCAW) and for electrogas welding (EGW). The electroslag welding (ESW) process uses a variety of filler metals, solid wires, composite wires, consumable tubes, strip and even plate filler metal.

The oxy-fuel welding processes also make use of filler metals, usually solid wires, though tubular composite wires are employed on rare occasions. Most of the solid wires which are found suitable for arc welding are also applicable in the oxy-fuel process.

Brazing filler metals are usually treated as a distinct class with many alloys and filler metal forms.

Designation Systems in National Specifications

Welding filler metals are generally defined by several attributes:

1. the mechanical properties of the welds which they produce,
2. the suitability of the filler metal for various applications,
3. the slag forming ingredients used in the manufacture, and/or
4. their metallic composition either that of the weld metal or of the filler metal itself.

To incorporate all of the properties of a filler metal in its designation often becomes unwieldy and awkward. There is a tension between causing the designation to completely define the product and simplicity for ease of understanding. The marketplace has usually dictated a preference for simplicity, rather than complexity. Compromises abound, however, as industry desires to distinguish between competing products for similar applications. What follows illustrates how designations appear in specifications found in various industrialized countries.

Table 12.2 Fourth Digit for Alloy Modifiers of Stainless Steel Filler Metals[a]

0	No modifying element
1	High silicon
2	Molybdenum (not 316 or 317)
3	Low carbon, or low residuals
4	Minimum carbon, e.g. 304H
5	High carbon
6	Molybdenum with low carbon (not 316 or 317)
7	Niobium (not 347 or 348)
8	High silicon with low carbon
9	Open for special alloy modifications

a. Not applicable to duplex stainless steels or others which have significantly different UNS numbers. [Table 2 from Welding in the World, May/June, p. 159.]

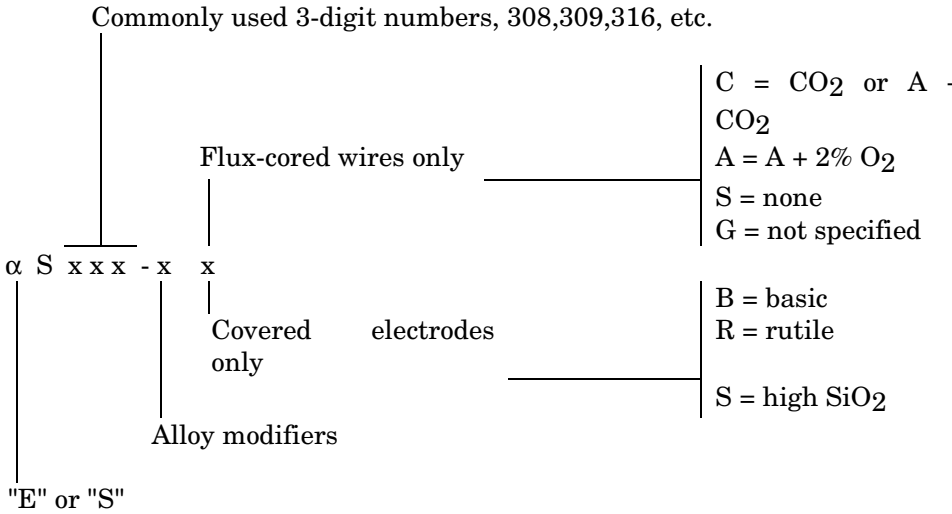

Figure 12.4 Designation system for stainless steels.

Aluminum filler metals are given the well recognized four-digit numbers established around the world (see Table 12.3).

Chapter 13

CAST IRON FILLER METALS

AWS A5.15 CHEMICAL COMPOSITION REQUIREMENTS FOR UNDILUTED WELD METAL FOR SHIELDED METAL ARC

AWS A5.15 Classification[d]	UNS Number[e]	Composition, Weight Percent[a,b,c]
Shielded Metal Arc Welding Electrodes		
ENi-CI	W82001	C 2.0 Mn 2.5 Si 4.0 S 0.03 Fe 8.0 Ni[f] 85 min. Cu[g] 2.5 Al 1.0 Other Elements Total 1.0
ENi-CI-A	W82003	C 2.0 Mn 2.5 Si 4.0 S 0.03 Fe 8.0 Ni[f] 85 min. Cu[g] 2.5 Al 1.0-3.0 Other Elements Total 1.0
ENiFe-CI	W82002	C 2.0 Mn 2.5 Si 4.0 S 0.03 Fe Rem Ni[f] 45-60 Cu[g] 2.5 Al 1.0 Other Elements Total 1.0
ENiFe-CI-A	W82004	C 2.0 Mn 2.5 Si 4.0 S 0.03 Fe Rem Ni[f] 45-60 Cu[g] 2.5 Al 1.0-3.0 Other Elements Total 1.0
ENiFeMn-CI	W82006	C 2.0 Mn 10-14 Si 1.0 S 0.03 Fe Rem Ni[f] 35-45 Cu[g] 2.5 Al 1.0 Other Elements Total 1.0
ENiCu-A	W84001	C 0.35-0.55 Mn 2.3 Si 0.75 S 0.025 Fe 3.0-6.0 Ni[f] 50-60 Cu[g] 35-45 Other Elements Total 1.0
ENiCu-B	W84002	C 0.35-0.55 Mn 2.3 Si 0.75 S 0.025 Fe 3.0-6.0 Ni[f] 60-70 Cu[g] 25-35 Other Elements Total 1.0
Flux Cored Arc Welding Electrodes		
ENiFeT3-CI[h]	W82032	C 2.0 Mn 3.0-5.0 Si 1.0 S 0.03 Fe Rem Ni[f] 45-60 Cu[g] 2.5 Al 1.0 Other Elements Total 1.0

a. The weld metal, core wire, or the filler metal, as specified, shall be analyzed for the specific elements for which values are shown in this table. If the presence of other elements is indicated in the course of this work, the amount of those elements shall be determined to ensure that their total does not exceed the limit specified for "Other Elements Total" in this table.
b. Single values are maximum, except where otherwise specified.
c. "Rem" stands for Remainder.
d. Copper-base filler metals frequently used in the braze welding of cast irons are no longer included in this specification. For information pertaining to these materials, see AWS A5.15 appendix A7.6.
e. SAE/ASTM Unified Numbering System for Metals and Alloys.
f. Nickel plus incidental cobalt.
g. Copper plus incidental silver.
h. No shielding gas shall be used for classification ENiFeT3-CI.

Chapter

14

CARBON & LOW ALLOY STEEL FILLER METALS

AWS A5.1 CARBON STEEL ELECTRODE CLASSIFICATION

CARBON STEEL ELECTRODE CLASSIFICATION			
AWS A5.1 Classification	**Type of Covering**	**Welding Position[a]**	**Type of Current[b]**
E6010	High cellulose sodium	F, V, OH, H	dcep
E6011	High cellulose potassium	F, V, OH, H	ac or dcep
E6012	High titania sodium	F, V, OH, H	ac or dcen
E6013	High titania potassium	F, V, OH, H	ac, dcep or dcen
E6019	Iron Oxide titania potassium	F, V, OH, H	ac, dcep or dcen
E6020	High iron oxide	H-fillets, F	ac or dcen ac, dcep or dcen
E6022[c]	High iron oxide	F, H	ac or dcen
E6027	High iron oxide, iron powder	H-fillets, F	ac or dcen ac, dcep or dcen
E7014	Iron powder, titania	F, V, OH, H	ac, dcep or dcen
E7015[d]	Low hydrogen sodium	F, V, OH, H	dcep
E7016[d]	Low hydrogen potassium	F, V, OH, H	ac or dcep
E7018[d]	Low hydrogen potassium, iron powder	F, V, OH, H	ac or dcep
E7018M	Low hydrogen iron powder	F, V, OH, H	dcep
E7024[d]	Iron powder, titania	H-fillets, F	ac, dcep or dcen
E7027	High iron oxide, iron powder	H-fillets, F	ac or dcen ac, dcep or dcen
E7028[d]	Low hydrogen potassium, iron powder	H-fillets, F	ac or dcep
E7048[d]	Low hydrogen potassium, iron powder	F, OH, H, V-down	ac or dcep

a. The abbreviations indicate the welding positions as follows: F = Flat, H = Horizontal, H-fillets = Horizontal fillets, V-down = Vertical with downward progression, V = Vertical, OH = Overhead: For electrodes 3/16 in. (4.8 mm) and under, except 5/32 in. (4.0 mm) and under for classifications E7014, E7015, E7016, E7018 and E7018M.

AWS A5.29 CLASSIFICATION SYSTEM (Continued)

Fourth X Designates the chemical composition of the deposited weld metal (see AWS A5.29 Table 4). Specific chemical compositions are not always identified with specific mechanical properties in the specification. A supplier is required by the specification to include the mechanical properties appropriate for a particular electrode in classification of that electrode. Thus, for example, a complete designation is E80T5-Ni3, EXXT5-Ni3 is not a complete classification. The letter G indicates that the chemical composition is not specified.

M An "M" designator in this position indicates that the electrode is classified using 75-80% argon/bal CO_2 shielding gas. When the "M" designator does not appear, it signifies that either the shielding gas used for classification is CO_2, or that the electrode is a self shielding elctrode.

Optional Supplemental Designators

J Designates that the electrode meets the requirements for improved toughness by meeting a requirement of 20 ft·lbf (27 J) at a test temperature of 20°F (11°C) lower than the temperature shown for that classification in Table 2 of AWS A5.29. Absence of the "J" indicates normal impact requirements as given in that table.

HZ Designates that the electrode meets the requirements of the diffusible hydrogen test (an optional supplemental test of the weld metal with an average value not exceeding "Z" mL of H_2 per 100 g of deposited metal where "Z" is 4, 8, or 16). See Table 10 and A8.2 of AWS A5.29.

Chapter

15

STAINLESS STEEL WELDING FILLER METALS

AWS A5.4 CHEMICAL COMPOSITION REQUIREMENTS FOR UNDILUTED WELD METAL

CHEMICAL COMPOSITION REQUIREMENTS FOR UNDILUTED WELD METAL		
AWS A5.4 Classification[c]	**UNS Number[d]**	**Weight Percent [a,b]**
E209-XX[e]	W32210	C 0.06 Cr 20.5-24.0 Ni 9.5-12.0 Mo 1.5-3.0 Mn 4.0-7.0 Si 0.90 P 0.04 S 0.03 N 0.10-0.30 Cu 0.75
E219-XX	W32310	C 0.06 Cr 19.0-21.5 Ni 5.5-7.0 Mo 0.75 Mn 8.0-10.0 Si 1.00 P 0.04 S 0.03 N 0.10-0.30 Cu 0.75
E240-XX	W32410	C 0.06 Cr 17.0-19.0 Ni 4.0-6.0 Mo 0.75 Mn 10.5-13.5 Si 1.00 P 0.04 S 0.03 N 0.10-0.30 Cu 0.75
E307-XX	W30710	C 0.04-0.14 Cr 18.0-21.5 Ni 9.0-10.7 Mo 0.5-1.5 Mn 3.30-4.75 Si 0.90 P 0.04 S 0.03 Cu 0.75
E308-XX	W30810	C 0.08 Cr 18.0-21.0 Ni 9.0-11.0 Mo 0.75 Mn 0.5-2.5 Si 0.90 P 0.04 S 0.03 Cu 0.75
E308H-XX	W30810	C 0.04-0.08 Cr 18.0-21.0 Ni 9.0-11.0 Mo 0.75 Mn 0.5-2.5 Si 0.90 P 0.04 S 0.03 Cu 0.75
E308L-XX	W30813	C 0.04 Cr 18.0-21.0 Ni 9.0-11.0 Mo 0.75 Mn 0.5-2.5 Si 0.90 P 0.04 S 0.03 Cu 0.75
E308Mo-XX	W30820	C 0.08 Cr 18.0-21.0 Ni 9.0-12.0 Mo 2.0-3.0 Mn 0.5-2.5 Si 0.90 P 0.04 S 0.03 Cu 0.75
E308MoL-XX	W30823	C 0.04 Cr 18.0-21.0 Ni 9.0-12.0 Mo 2.0-3.0 Mn 0.5-2.5 Si 0.90 P 0.04 S 0.03 Cu 0.75
E309-XX	W30910	C 0.15 Cr 22.0-25.0 Ni 12.0-14.0 Mo 0.75 Mn 0.5-2.5 Si 0.90 P 0.04 S 0.03 Cu 0.75
E309L-XX	W30913	C 0.04 Cr 22.0-25.0 Ni 12.0-14.0 Mo 0.75 Mn 0.5-2.5 Si 0.90 P 0.04 S 0.03 Cu 0.75
E309Cb-XX	W30917	C 0.12 Cr 22.0-25.0 Ni 12.0-14.0 Mo 0.75 Cb (Nb) plus Ta 0.70-1.00 Mn 0.5-2.5 Si 0.90 P 0.04 S 0.03 Cu 0.75
E309Mo-XX	W30920	C 0.12 Cr 22.0-25.0 Ni 12.0-14.0 Mo 2.0-3.0 Mn 0.5-2.5 Si 0.90 P 0.04 S 0.03 Cu 0.75
E309-MoL-XX	W30923	C 0.04 Cr 22.0-25.0 Ni 12.0-14.0 Mo 2.0-3.0 Mn 0.5-2.5 Si 0.90 P 0.04 S 0.03 Cu 0.75
E310-XX	W31010	C 0.08-0.20 Cr 25.0-28.0 Ni 20.0-22.5 Mo 0.75 Mn 1.0-2.5 Si 0.75 P 0.03 S 0.03 Cu 0.75
E310H-XX	W31015	C 0.35-0.45 Cr 25.0-28.0 Ni 20.0-22.5 Mo 0.75 Mn 1.0-2.5 Si 0.75 P 0.03 S 0.03 Cu 0.75
E310Cb-XX	W31017	C 0.12 Cr 25.0-28.0 Ni 20.0-22.0 Mo 0.75 Cb (Nb) plus Ta 0.70-1.00 Mn 1.0-2.5 Si 0.75 P 0.03 S 0.03 Cu 0.75
E310Mo-XX	W31020	C 0.12 Cr 25.0-28.0 Ni 20.0-22.0 Mo 2.0-3.0 Mn 1.0-2.5 Si 0.75 P 0.03 S 0.03 Cu 0.75
E312-XX	W31310	C 0.15 Cr 28.0-32.0 Ni 8.0-10.5 Mo 0.75 Mn 0.5-2.5 Si 0.90 P 0.04 S 0.03 Cu 0.75
E316-XX	W31610	C 0.08 Cr 17.0-20.0 Ni 11.0-14.0 Mo 2.0-3.0 Mn 0.5-2.5 Si 0.90 P 0.04 S 0.03 Cu 0.75
E316H-XX	W31610	C 0.04-0.08 Cr 17.0-20.0 Ni 11.0-14.0 Mo 2.0-3.0 Mn 0.5-2.5 Si 0.90 P 0.04 S 0.03 Cu 0.75
E316L-XX	W31613	C 0.04 Cr 17.0-20.0 Ni 11.0-14.0 Mo 2.0-3.0 Mn 0.5-2.5 Si 0.90 P 0.04 S 0.03 Cu 0.75

ALL-WELD-METAL CHEMICAL COMPOSITION REQUIREMENTS (Continued)		
AWS A5.22 Classification[c]	**UNS Number[d]**	**Composition, Weight Percent[a,b]**
E410NiTiT0-3[e]	W41038	C 0.04 Cr 11.0-12.0 Ni 3.6-4.5 Mo 0.5 Mn 0.70 Si 0.50 P 0.03 S 0.03 Cu 0.5
E430T0-3	W43031	C 0.10 Cr 15.0-18.0 Ni 0.60 Mo 0.5 Mn 1.0 Si 1.0 P 0.04 S 0.03 Cu 0.5
E2209T0-X	W39239	C 0.04 Cr 21.0-24.0 Ni 7.5-10.0 Mo 2.5-4.0 Mn 0.5-2.0 Si 1.0 P 0.04 S 0.03 N 0.08-2.0 Cu 0.5
E2553T0-X	W39533	C 0.04 Cr 24.0-27.0 Ni 8.5-10.5 Mo 2.9-3.9 Mn 0.5-1.5 Si 0.75 P 0.04 S 0.03 N 0.10-0.20 Cu 1.5-2.5
EXXXTX-G[h]	Not Specified	
R308LT1-5	W30835	C 0.03 Cr 18.0-21.0 Ni 9.0-11.0 Mo 0.5 Mn 0.5-2.5 Si 1.2 P 0.04 S 0.03 Cu 0.5
R309LT1-5	W30935	C 0.03 Cr 22.0-25.0 Ni 12.0-14.0 Mo 0.5 Mn 0.5-2.5 Si 1.2 P 0.04 S 0.03 Cu 0.5
R316LT1-5	W31635	C 0.03 Cr 17.0-20.0 Ni 11.0-14.0 Mo 2.0-3.0 Mn 0.5-2.5 Si 1.2 P 0.04 S 0.03 Cu 0.5
R347T1-5	W34731	C 0.08 Cr 18.0-21.0 Ni 9.0-11.0 Mo 0.5 Cb(Nb) + Ta 8 x C min to 1.0 max Mn 0.5-2.5 Si 1.2 P 0.04 S 0.03 Cu 0.5

a. The weld metal shall be analyzed for the specific elements in this table. If the presence of other elements is indicated in the course of this work, the amount of those elements shall be determined to ensure that their total (excluding iron) does not exceed 0.50%.
b. Single values shown are maximum.
c. In this table, the "X" following the "T" refers to the position of welding (1 for all-position operation or 0 for flat or horizontal operation) and the "X" following the dash refers to the shielding medium (–1, –4, or –5) as shown in the AWS A5.22 Classification column, Table 2. For informmation concerning the "G", see AWS A5.22 paragraphs A2.3.7 and A2.3.8 of the Annex. In A5.22-80, the position of welding was not included in the classification. Accordingly, electrodes classified herein as either EXXXT0-1 or EXXXT1-1 would both have been classified EXXXT-1 and so forth.
d. ASTM /SAE Unified Number System for Metals and Alloys
e. Titanium–10 x C min., 1.5% max.
f. See footnote 3 on page 1 of AWS A 5.22.
g. This alloy is designed for cryogenic applications.
h. See paragraphs A2.3.7 and A2.3.8 of AWS A5.22.

Chapter 16

ALUMINUM & ALUMINUM ALLOY WELDING FILLER METALS

AWS A5.3 CHEMICAL COMPOSITION REQUIREMENTS FOR CORE WIRE (WEIGHT PERCENT)[a, b]

CHEMICAL COMPOSITION REQUIREMENTS FOR CORE WIRE (WEIGHT PERCENT)[a,b]		
AWS A5.3 Classification	**UNS Designation[c]**	**Composition, Weight Percent**
E1100	A91100	Si[d] Fe[d] Cu 0.05-0.20 Mn 0.05 Zn 0.10 Be 0.0008 Other Elements Each 0.05 Other Elements Total 0.15 Al 99.00 min[e]
E3003	A93003	Si 0.6 Fe 0.7 Cu 0.05-0.20 Mn 1.0-1.5 Zn 0.10 Be 0.0008 Other Elements Each 0.05 Other Elements Total 0.15 Al Remainder
E4043	A94043	Si 4.5-6.0 Fe 0.8 Cu 0.30 Mn 0.05 Mg 0.05 Zn 0.10 Ti 0.20 Be 0.0008 Other Elements Each 0.05 Other Elements Total 0.15 Al Remainder

a. The core wire, or the stock from which it is made, shall be analyzed for the specific elements for which values are shown in this table. If the presence of other elements is indicated in the course of work, the amount of those elements shall be determined to ensure that they do not exceed the limits specified for "Other Elements".
b. Single values are maximum, except where otherwise specified.
c. SAE/ASTM Unified Numbering System for Metals and Alloys.
d. Silicon plus iron shall not exceed 0.95 percent.
e. The aluminum content for unalloyed aluminum is the difference between 100.00 percent and the sum of all other metallic elements present in amounts of 0.010 percent or more each, expressed to the second decimal before determining the sum.

GUIDE TO THE CHOICE OF FILLER METAL FOR GENERAL PURPOSE WELDING (Continued)

Base Metal	5154, 5254[i]	5086	5083	5052, 5652[i]	5005, 5050	3004, Alc. 3004	2219	2014, 2036	1100, 3003, Alc. 3003	1060, 1070, 1080, 1350
1060, 1070, 1080, 1350	ER5356[c,d]	ER5356[d]	ER5356[d]	ER4043[b,d]	ER1100[b,c]	ER4043[b,d]	ER4145[b,c]	ER4145	ER1100[b,c]	ER1188[b,c,h,j]
1100, 3003, Alc. 3003	ER5356[c,d]	ER5356[d]	ER5356[d]	ER4043[b,d]	ER1100[b,c]	ER4043[b,d]	ER4145[b,c]	ER4145	ER1100[b,c]	-
2014, 2036	-	-	-	-	ER4145	ER4145	ER4145[e]	ER4145[e]	-	
2219	ER4043	-	-	ER4043[b]	ER4043[a,b]	ER4043[a,b]	ER2319[a]	-	-	-
3004, Alc. 3004	ER5356[f]	ER5356[d]	ER5356[d]	ER5356[c,f]	ER5356[c,f]	ER5356[c,f]	-	-	-	-
5005, 5050	ER5356[f]	ER5356[d]	ER5356[d]	ER5356[c,d]	ER5356[c,f]	-	-	-	-	-
5052, 5652[i]	ER5356[f]	ER5356[d]	ER5356[d]	ER5654[c,f,i]	-	-	-	-		-
5083	ER5356[d]	ER5356[d]	ER5183[d]	-	-	-	-	-		-
5086	ER5356[d]	ER5356[d]	-	-	-	-	-	-	-	-
5154, 5254[i]	ER5654[f,i]	-	-	-	-	-	-	-	-	-

a. R4145 may be used for some applications.
b. R4047 may be used for some applications.
c. R4043 may be used for some applications.
d. R5183, ER5356, or ER5556 may be used.
e. R2319 may be used for some applications. It can supply high strength when the weldment is postweld solution heat treated and aged.
f. R5183, ER5356, ER5554, ER5556, and ER5654 may be used. In some cases, they provide: (1) improved color match after anodizing treatment, (2) highest weld ductility, and (3) higher weld strength. ER5554 is suitable for sustained elevated temperature service.
g. R4643 will provide high strength in 1/2 in. (12 mm) and thicker groove welds in 6XXX base alloys when postweld solution heat treated and aged.
h. iller metal with the same analysis as the base metal is sometimes used. The following wrought filler metals possess the same chemical composition limits as cast filler alloys: ER4009 and R4009 as R-C355.0; ER4010 and R4010 as R-A356.0; and R4011 as R-A357.0.
i. ase metal alloys 5254 and 5652 are used for hydrogen peroxide service. ER5654 filler metal is used for welding both alloys for service temperatures below 150°F (66°C).
j. R1100 may be used for some applications.

GUIDE TO THE CHOICE OF FILLER METAL FOR GENERAL PURPOSE WELDING (Continued)

Notes:

1. Service conditions such as immersion in fresh or salt water, exposure to specific chemicals, or a sustained high temperature (over 150°F or 66°C) may limit the choice of filler metals. Filler metals ER5183, ER5356, ER5556, and ER5654 are not recommended for sustained elevated temperature service.
2. Recommendations in this table apply to gas shielded arc welding processes. For oxyfuel gas welding, only ER1188, ER1100, ER4043, ER4047, and ER4145 filler metals are ordinarily used.
3. Where no filler metal is listed, the base metal combination is not recommended for welding.

AWS A5.10 CLASSIFICATION SYSTEM

Both welding electrodes and rods are classified upon the basis of the chemical composition of the aluminum filler metal and a usability test.

The AWS classifications used in this specification are based as follows:

The Aluminum Association alloy designation nomenclature is used for the numerical portion to identify the alloy and thus its registered chemical composition.

A letter prefix designates usability of the filler metal. The letter system for identifying the filler metal classifications in this specification follows the standard pattern used in other AWS filler metal specifications. The prefix "E" indicates the filler metal is suitable for use as an electrode and the prefix "R" indicates suitability as welding rod. Since some of these filler metals are used as electrodes in gas metal arc welding, and as welding rods in oxyfuel gas, gas tungsten arc, and plasma arc welding, both letters, "ER", are used to indicate suitability as an electrode or a rod. In all cases, an electrode, that meets the tests prescribed in this specification, can be used either as an electrode or a welding rod, but the reverse is not necessarily true.

Minor changes in procedures used in the manufacture of aluminum filler metals can affect their surface quality and significantly affect the resultant weld soundness. Usability testing of the electrode is desirable on a periodic basis to assure that the product classified in this specification continues to meet the soundness requirement.

The supplier should perform the usability tests of this specification on an annual basis, as a minimum, to assure that the specified soundness and operating characteristics criteria are maintained. ANSI/AWS A5.01, Filler Metal Procurement Guidelines, should be used by a purchaser for definition of lot and frequency of testing references when purchasing aluminum filler metals.

Chapter

17

COPPER & COPPER ALLOY WELDING FILLER METALS

AWS A5.6 CHEMICAL COMPOSITION REQUIREMENTS FOR UNDILUTED METAL

CHEMICAL COMPOSITION REQUIREMENTS FOR UNDILUTED METAL			
AWS A5.6 Classification	**UNS Number**	**Common Name**	**Composition, Weight Percent[a,b]**
ECu	W60189	Copper	Cu including Ag remainder, Zn[f] Sn[f] Mn 0.10 Fe 0.20 Si 0.10 Ni[d,f] P[f] Al 0.10 Pb 0.02 Total Other Elements 0.50
ECuSi	W60656	Silicon bronze (copper silicon)	Cu including Ag remainder, Zn[f] Sn 1.5 Mn 1.5 Fe 0.50 Si 1.4 to 4.0 Ni[d,f] P[f] Al 0.01 Pb 0.02 Total Other Elements 0.50
ECuSn-A	W60518	Phosphor bronze (copper-tin)	Cu including Ag remainder, Zn[f] Sn 4.0-6.0 Mn[f] Fe 0.25 Si f Ni[d,f] P 0.05-0.35 Al 0.01 Pb 0.02 Total Other Elements 0.50
ECuSn-C	W60521	Phosphor bronze (copper-tin)	Cu including Ag remainder, Zn[f] Sn 7.0-9.0 Mn[f] Fe 0.25 Si f Ni[d,f] P 0.05-0.35 Al 0.01 Pb 0.02 Total Other Elements 0.50
ECuNi[e]	W60751	Copper nickel (70/30)	Cu including Ag remainder, Zn[f] Sn[f] Mn 1.00-2.50 Fe 0.40-0.75 Si 0.50 Ni[d] 29.0-33.0 P 0.020 Pb 0.02 Ti 0.50 Total Other Elements 0.50
ECuAl-A2	W60614	Aluminum bronze	Cu including Ag remainder, Zn[f] Sn[f] Mn[f] Fe 0.50-5.0 Si 1.5 Ni[d,f] Al 6.5-9.0 Pb 0.02 Total Other Elements 0.50
ECuAl-B	W60619	Aluminum bronze	Cu including Ag remainder, Zn[f] Sn[f] Mn[f] Fe 2.5-5.0 Si 1.5 Ni[d,f] Al 7.5-10.0 Pb 0.02 Total Other Elements 0.50
ECuNiAl	W60632	Nickel aluminum bronze	Cu including Ag remainder, Zn[f] Sn[f] Mn 0.50-3.5 Fe 3.0-6.0 Si 1.5 Ni[d] 4.0-6.0 Al 6.0-8.5 Pb 0.02 Total Other Elements 0.50
ECuMnNiAl	W60633	Manganese-nickel aluminum bronze	Cu including Ag remainder, Zn[f] Sn[f] Mn 11.0-13.0 Fe 2.0-6.0 Si 1.5 Ni[d] 1.0-2.5 Al 5.0-7.5 Pb 0.02 Total Other Elements 0.50

a. Analysis shall be made for the elements for which specific values or an "f" are shown in this table. If, however, the presence of other elements is indicated in the course of routine analysis, further analysis shall be made to determine that the total of these other elements is not present in excess of the limits specified for 'total other elements' in the last column in the table.

CHEMICAL COMPOSITION REQUIREMENTS, PERCENT (Continued)

c. Classifications RBCuZn-A, RCuZn-B, RCuZn-C, and RBCuZn-D now are included in AWS A5.27-78, *Specification for Copper and Copper Alloy Gas Welding Rods.*
d. SAE/ASTM Unified Numbering System for Metals and Alloys.
e. Sulfur shall be 0.01 percent maximum for the ERCuNi classification.

STANDARD SIZES

	Diameter[a,b]		
AWS A5.7 Form	**in.**	**in.**	**mm**
Straight lengths	1/16	(0.062)	1.6
Straight lengths	5/64	(0.078)	2.0
Straight lengths	3/32	(0.092)	2.4
Coils, with or without support	1/8	(0.125)	3.2
Coils, with or without support	5/32	(0.156)	4.0
Coils, with or without support	3/16	(0.187)	4.8
Coils, with or without support	1/4	(0.250)	6.4
Wound on spools	0.020		0.5
Wound on spools	0.030		0.8
Wound on spools	0.035		0.9
Wound on spools	0.045		1.2
Wound on spools	0.062	(1/16)	1.6
Wound on spools	0.078	(5/64)	2.0
Wound on spools	0.094	(3/32)	2.4

a. Filler metal shall not vary more than ± 0.002 in. (0.05 mm) in diameter.
b. Other sizes, lengths, and forms may be supplied as agreed upon between the purchaser and supplier.

HARDNESS AND TENSILE STRENGTH OF COPPER AND COPPER ALLOY WELD METAL[a]

AWS A5.7 Classification	Hardness Testing		Tensile strength, min.	
	Hardness	Testing Load	psi	MPa
ERCu	25 HRF		25 000	172
ERCuSi-A	80 to 100 HB	(500 kg load)	50 000	345
ERCuSn-A	70 to 85 HB	(500 kg load)	35 000	240
ERCuNi	60 to 80 HB	(500 kg load)	50 000	345
ERCuAl-A1	80 to 110 HB	(500 kg load)	55 000	380
ERCuAl-A2	130 to 150 HB	(3000 kg load)[b]	60 000	414
ERCuAl-A3	140 to 180 HB	(3000 kg load)[b]	65 000	450
ERCuNiAl	160 to 200 HB	(3000 kg load)[b]	72 000	480
ERCuMnNiAl	160 to 200 HB	(3000 kg load)[b]	75 000	515

a. Hardness values as listed above are average values for an as-welded deposit made with the filler metal specified. This table is included for information only.
b. Gas tungsten arc process only.

AWS A5.7 CLASSIFICATION SYSTEM

The specification classifies those copper and copper alloy filler metals used most extensively at the time of issuance of the specification. In AWS A5.7 appendix A4, the filler metals are arranged in five basic groups. The tensile properties, bend ductility, and soundness of welds produced with the filler metals classified within this specification frequently are determined during procedure qualification. It should be noted that the variables in the procedure (current, voltage, and welding speed), variables in shielding medium (the specific gas mixture or the flux), variables in the composition of the base metal and the filler metal influence the results which may be obtained. When these variables are properly controlled, however, the filler metal shall give sound welds whose strengths (determined by all-weld-metal tension tests) will meet or exceed the minimums shown in AWS A5.7 Table A1. Typical hardness properties are also included in AWS A5.7 Table A1. When supplementary tests for mechanical properties are specified, the procedures should be in accordance with AWS B4.0, *Standard Methods for Mechanical Testing of Welds*. The system for identifying the filler metal classification in this specification follows the standard pattern used in other AWS filler metal specifications. The letters ER at the beginning of a classification indicate that the bare filler metal may be used either as an electrode or as a welding rod.

The chemical symbol Cu is used to identify the filler metals as copper-base alloys. The additional chemical symbols, as the Si in ERCuSi, the Sn in ERCuSn, etc., indicate the principal alloying element of each group. Where more than one classification is included in a basic group, the individual classifications in the group are identified by the letters, A, B, C, etc., as in ERCuSn-A. Further subdividing is done by using 1, 2, etc., after the last letter, as the 2 in ERCuAl-2.

Chapter 18

MAGNESIUM ALLOY WELDING FILLER METALS

AWS A5.19 CHEMICAL COMPOSITION REQUIREMENTS FOR MAGNESIUM ALLOY ELECTRODES AND RODS

CHEMICAL COMPOSITION REQUIREMENTS FOR MAGNESIUM ALLOY ELECTRODES AND RODS		
AWS A5.19 Classification	**UNS Number[c]**	**Composition, Weight Percent[a,b]**
ER AZ61A, R AZ61A	M11611	Mg Remainder Al 5.8 to 7.2 Be 0.0002 to 0.0008 Mn 0.15 to 0.5 Zn 0.40 to 1.5 Cu 0.05 Fe 0.005 Ni 0.005 Si 0.05 Other Elements Total 0.30
ER AZ92A, R AZ92A	M11922	Mg Remainder Al 8.3 to 9.7 Be 0.0002 to 0.0008 Mn 0.15 to 0.5 Zn 1.7 to 2.3 Cu 0.05 Fe 0.005 Ni 0.005 Si 0.05 Other Elements Total 0.30
ER AZ101A, R AZ101A	M11101	Mg Remainder Al 9.5 to 10.5 Be 0.0002 to 0.0008 Mn 0.15 to 0.5 Zn 0.75 to 1.25 Cu 0.05 Fe 0.005 Ni 0.005 Si 0.05 Other Elements Total 0.30
ER EZ33A, R EZ33A	M12331	Mg Remainder Be 0.0008 Zn 2.0 to 3.1 Zr 0.45 to 1.0 Rare Earth 2.5 to 4.0 Other Elements Total 0.30

a. The filler metal shall be analyzed for the specific elements for which values are shown in this table. If the presence of other elements is indicated in the course of this work, the amount of those elements shall be determined to ensure that their total does not exceed the limits specified for "Other Elements Total".

b. Single values are maximum.

c. SAE/ASTM Unified Numbering System for Metals and Alloys.

GUIDE TO THE CHOICE OF FILLER METAL FOR GENERAL PURPOSE WELDING

Base Metal	Base Metal[c]											
	AM100A	**AZ10A**	**AZ31B AZ31C**	**AZ61A**	**AZ63A**	**AZ80A**	**AZ81A**	**Z91C**	**AZ92A**	**EK41A**	**EZ33A**	**HK31A**
	Filler Metal[a,b]											
AM100A	AZ101A AZ92A	-	-	-	-	-	-	-	-	-	-	-
AZ10A	AZ92A	AZ61A AZ92A	-	-	-	-	-	-	-	-	-	-
AZ31B AZ31C	AZ92A	AZ61A AZ92A	AZ61A AZ92A	-	-	-	-	-	-	-	-	-
AZ61A	AZ92A	AZ61A AZ92A	AZ61A AZ92A	AZ61A AZ92A	-	-	-	-	-	-	-	-
AZ63A	c	c	c	c	AZ101A AZ92A	-	-	-	-	-	-	-
AZ80A	AZ92A	AZ61A AZ92A	AZ61A AZ92A	AZ61A AZ92A	c	AZ61A AZ92A	-	-	-	-	-	-
AZ81A	AZ92A	AZ92A	AZ92A	AZ92A	c	AZ92A	AZ61A AZ92A	-	-	-	-	-
AZ91C	AZ92A	AZ92A	AZ92A	AZ92A	c	AZ92A	AZ92A	AZ101A AZ92A	-	-	-	-
AZ92A	AZ92A	AZ92A	AZ92A	AZ92A	c	AZ92A	AZ92A	AZ92A	AZ101A	-	-	-
EK41A	AZ92A	AZ92A	AZ92A	AZ92A	c	AZ92A	AZ92A	AZ92A	AZ92A	EZ33A	-	-
EZ33A	AZ92A	AZ92A	AZ92A	AZ92A	c	AZ92A	AZ92A	AZ92A	AZ92A	EZ33A	EZ33A	-
HK31A	AZ92A	AZ92A	AZ92A	AZ92A	c	AZ92A	AZ92A	AZ92A	AZ92A	EZ33A	EZ33A	EZ33A
HM21A	AZ92A	AZ92A	AZ92A	AZ92A	c	AZ92A	AZ92A	AZ92A	AZ92A	EZ33A	EZ33A	EZ33A
HM31A	AZ92A	AZ92A	AZ92A	AZ92A	c	AZ92A	AZ92A	AZ92A	AZ92A	EZ33A	EZ33A	EZ33A

AWS A5.19 CLASSIFICATION SYSTEM

The welding electrodes and rods are classified upon the basis of the chemical composition. The alloys are designated by the same standard system used for base metals. That consists of a combination letter-number system composed of three parts. The first part indicates the two principal alloying elements by code letters arranged in order of decreasing percentage. The second part indicates the percentages of the two principal alloying elements in the same order as the code letters. The percentages are rounded to the nearest whole number. The third part is an assigned letter to distinguish different alloys with the same percentages of the two principal alloying elements.

A letter prefix designates usability of the filler metal. The letter system for identifying the filler metal classifications in this specification follows the standard pattern used in other AWS filler metal specifications. The prefix “E” indicates the filler metal is suitable for use as an electrode and the prefix “R” indicates suitability as welding rod. Since some of these filler metals are used as electrodes in gas metal arc welding, and as welding rods in oxyfuel gas, gas tungsten arc, and plasma arc welding, both letters, “ER”, are used to indicate suitability as an electrode or a rod.

Chapter 19

NICKEL & NICKEL ALLOY WELDING FILLER METALS

AWS A5.11 CHEMICAL COMPOSITION REQUIREMENTS FOR UNDILUTED WELD METAL

Chemical Composition Requirements for Undiluted Weld Metal		
AWS A5.11 Classification	**UNS Number[c]**	**Composition, Weight Percent[a,b]**
ENi-1	W82141	C 0.10 Mn 0.75 Fe 0.75 P 0.03 S 0.02 Si 1.25 Cu 0.25 Ni[d] 92.0 min. Al 1.0 Ti 1.0 to 4.0 Other Elements Total 0.50
ENi-Cu-7	W84190	C 0.15 Mn 4.00 Fe 2.5 P 0.02 S 0.015 Si 1.5 Cu Rem Ni[d] 62.0-69.0 Al 0.75 Ti 1.0 Other Elements Total 0.50
ENiCrFe-1	W86132	C 0.08 Mn 3.5 Fe 11.0 P 0.03 S 0.015 Si 0.75 Cu 0.50 Ni[d] 62.0 min. Cr 13.0 to 17.0 Cb Plus Ta 1.5 to 4.0[f] Other Elements Total 0.50
ENiCrFe-2	W86133	C 0.10 Mn 1.0 to 3.5 Fe 12.0 P 0.03 S 0.02 Si 0.75 Cu 0.50 Ni[d] 62.0 min. Co [e] Cr 13.0 to 17.0 Cb Plus Ta 0.5 to 3.0[f] Mo 0.50 to 2.50 Other Elements Total 0.50
ENiCrFe-3	W86182	C 0.10 Mn 5.0 to 9.5 Fe 10.0 P 0.03 S 0.015 Si 1.0 Cu 0.50 Ni[d] 59.0 min. Co [e] Ti 1.0 Cr 13.0 to 17.0 Cb Plus Ta 1.0 to 2.5[f] Other Elements Total 0.50
ENiCrFe-4	W86134	C 0.20 Mn 1.0 to 3.5 Fe 12.0 P 0.03 S 0.02 Si 1.0 Cu 0.50 Ni[d] 60.0 min. Cr 13.0 to 17.0 Cb Plus Ta 1.0 to 3.5 Mo 1.0 to 3.5 Other Elements Total 0.50
ENiMo-1	W80001	C 0.07 Mn 1.0 Fe 4.0 to 7.0 P 0.04 S 0.03 Si 1.0 Cu 0.50 Ni[d] Rem Co 2.5 Cr 1.0 Mo 26.0 to 30.0 V 0.60 W 1.0 Other Elements Total 0.50
ENiMo-3	W80004	C 0.12 Mn 1.0 Fe 4.0 to 7.0 P 0.04 S 0.03 Si 1.0 Cu 0.50 Ni[d] Rem Co 2.5 Cr 2.5 to 5.5 Mo 23.0 to 27.0 V 0.60 W 1.0 Other Elements Total 0.50
ENiMo-7	W80665	C 0.02 Mn 1.75 Fe 2.0 P 0.04 S 0.03 Si 0.2 Cu 0.50 Ni[d] Rem Co 1.0 Cr 1.0 Mo 26.0 to 30.0 W 1.0 Other Elements Total 0.50
ENiCrCoMo-1	W86117	C 0.05 to 0.15 Mn 0.30 to 2.5 Fe 5.0 P 0.03 S 0.015 Si 0.75 Cu 0.50 Ni[d] Rem Co 9.0 to 15.0 Cr 21.0 to 26.0 Cb Plus Ta 1.0 Mo 8.0 to 10.0 Other Elements Total 0.50
ENiCrMo-1	W86007	C 0.05 Mn 1.0 to 2.0 Fe 18.0 to 21.0 P 0.04 S 0.03 Si 1.0 Cu 1.5 to 2.5 Ni[d] Rem Co 2.5 Cr 21.0 to 23.5 Cb Plus Ta 1.75 to 2.50 Mo 5.5 to 7.5 W 1.0 Other Elements Total 0.50
ENiCrMo-2	W86002	C 0.05 to 0.15 Mn 1.0 Fe 17.0 to 20.0 P 0.04 S 0.03 Si 1.0 Cu 0.50 Ni[d] Rem Co 0.50 to 2.50 Cr 20.5 to 23.0 Mo 8.0 to 10.0 W 0.20 to 1.0 Other Elements Total 0.50

COMPARISON OF CLASSIFICATIONS			
Classification in A5.14		Military Designation[b, c]	Corresponding Classification in AWS A5 11-88[c]
Present Classification	Previous Classification[a, c]		
ERNi-1	ERNi-1	EN61 & RN61	ENi-1
ERNiCu-7	ERNiCu-7	EN60 & RN60	ENiCu-7
ERNiCr-3	ERNiCr-3	EN82 & RN82	ENiCrFe-3
ERNiCrFe-5	ERNiCrFe-5	EN62 & RN62	ENiCrFe-1
ERNiCrFe-6	ERNiCrFe-6	EN6A & RN6A	-
ERNiFeCr-1	ERNiFeCr-1	-	-
ERNiFeCr-2	Not Classified	-	-
ERNiMo-1	ERNiMo-1	-	ENiMo-1
ERNiMo-2	ERNiMo-2	-	-
ERNiMo-3	ERNiMo-3	-	ENiMo-3
ERNiMo-7	ERNiMo-7	-	ENiMo-7
ERNiCrMo-1	ERNiCrMo-1	-	ENiCrMo-1
ERNiCrMo-2	ERNiCrMo-2	-	ENiCrMo-2
ERNiCrMo-3	ERNiCrMo-3	EN625 & RN625	ENiCrMo-3
ERNiCrMo-4	ERNiCrMo-4	-	ENiCrMo-4
ERNiCrMo-7	ERNiCrMo-7	-	ENiCrMo-7
ERNiCrMo-8	ERNiCrMo-8	-	-
ERNiCrMo-9	ERNiCrMo-9	-	ENiCrMo-9
ERNiCrMo-10	Not Classified	-	ENiCrMo-10
ERNiCrMo-11	Not Classified	-	ENiCrMo-11
ERNiCrCoMo-1	Not Classified	-	ENiCrCoMo-1

a. AWS A5.14-83
b. Mil-E-21562.
c. Specifications are not exact duplicates. Information is supplied only for general comparison.

TYPICAL WELD METAL TENSILE STRENGTHS[a]		
AWS A5.14 Classification	**psi**	**MPa**
ERNi-1	55,000	380
ERNiCu-7	70,000	480
ERNiCr-3, ERNiCrFe-5, ERNiCrFe-6, ERNiFeCr-1	80,000	550
ERNiFeCr-2	165,000[b]	1,138[b]
ERNiMo-1, ERNiMo-2, ERNiMo-3	100,000	690
ERNiMo-7	110,000	760
ERNiCrMo-1, ERNiCrMo-8, ERNiCrMo-9, ERNiCrMo-11	85,000	590
ERNiCrCoMo-1	90,000	620
ERNiCrMo-2	95,000	660
ERNiCrMo-3	110,000	760
ERNiCrMo-4, ERNiCrMo-7, ERNiCrMo-10	100,000	690

a. Tensile strength in as-welded condition unless otherwise specified.
b. Age hardened condition: heat to 1,325°F (718°C), hold at temperature for eight hours, furnace cool to 1,150°F (620°C) at 100°F (55°C)/hour and then air cool.

AWS A5.14 CLASSIFICATION SYSTEM

The system for classifying the filler metals in this specification follows the standard pattern used in other AWS filler metal specifications. The letter “ER” at the beginning of each classification designation stands for electrode and rod, indicating that the filler metal may be used either way.

Since the filler metals are classified according to their chemical composition, the chemical symbol “Ni” appears right after the “ER” as a means of identifying the filler metals as nickel-base alloys. The other symbols (Cr, Cu, Fe, and Mo) in the designations are intended to group the filler metals according to their principal alloying elements. The individual designations are made up of these symbols and a number at the end of the designation (ERNiMo-1 and ERNiMo-2, for example). These numbers separate one composition from another within a group and are not repeated within that group.

Chapter

20

TITANIUM & TITANIUM ALLOY WELDING FILLER METALS

AWS A5.16 CHEMICAL COMPOSITION REQUIREMENTS FOR TITANIUM AND TITANIUM ALLOY ELECTRODES AND RODS

CHEMICAL COMPOSITION REQUIREMENTS FOR TITANIUM AND TITANIUM ALLOY ELECTRODES AND RODS			
AWS A5.16 Classification			
1990	1970	UNS Number[e]	Composition, Weight Percent[a,b,c,d]
ERTi-1	ERTi-1	R50100	C 0.03 O 0.10 H 0.005 N 0.015 Fe 0.10
ERTi-2	ERTi-2	R50120	C 0.03 O 0.10 H 0.008 N 0.020 Fe 0.20
ERTi-3	ERTi-3	R50125	C 0.03 O 0.10-0.15 H 0.008 N 0.020 Fe 0.20
ERTi-4	ERTi-4	R50130	C 0.03 O 0.15-0.25 H 0.008 N 0.020 Fe 0.30
ERTi-5	ERTi-6Al-4V	R56400	C 0.05 O 0.18 H 0.015 N 0.030 Al 5.5-6.7 V 3.5-4.5 Fe 0.30 Other Element Amount: Y 0.005
ERTi-5ELI	ERTi-6Al-4V-1	R56402	C 0.03 O 0.10 H 0.005 N 0.012 Al 5.5-6.5 V 3.5-4.5 Fe 0.15 Other Element Amount: Y 0.005
ERTi-6	ERTi-5Al-2.5Sn	R54522	C 0.08 O 0.18 H 0.015 N 0.050 Al 4.5-5.8 Sn 2.0-3.0 Fe 0.50 Other Element Amount: Y 0.005
ERTi-6ELI	ERTi-5Al-2.5Sn-1	R54523	C 0.03 O 0.10 H 0.005 N 0.012 Al 4.5-5.8 Sn 2.0-3.0 Fe 0.20 Other Element Amount: Y 0.005
ERTi-7	ERTi-0.2Pd	R52401	C 0.03 O 0.10 H 0.008 N 0.020 Fe 0.20 Other Element Amount: Pd 0.12/0.25
ERTi-9	ERTi-3Al-2.5V	R56320	C 0.03 O 0.12 H 0.008 N 0.020 Al 2.5-3.5 V 2.0-3.0 Fe 0.25 Other Element Amount: Y 0.005
ERTi-9ELI	ERTi-3Al-2.5V-1	R56321	C 0.03 O 0.10 H 0.005 N 0.012 Al 2.5-3.5 V 2.0-3.0 Fe 0.20 Other Element Amount: Y 0.005
ERTi-12	-	R53400	C 0.03 O 0.25 H 0.008 N 0.020 Fe 0.30 Other Element Amount: Mo 0.2/0.4, Ni 0.6/0.9
ERTi-15	ERTi-6Al-2Cb-1Ta-1Mo	R56210	C 0.03 O 0.10 H 0.005 N 0.015 Al 5.5-6.5 Fe 0.15 Other Element Amount: Mo 0.5/1.5, Cb 1.5/2.5, Ta 0.5/1.5

a. Titanium constitutes the remainder of the composition.
b. Single values are maximum.
c. Analysis of the interstitial elements C, O, H and N shall be conducted on samples of filler metal taken after the filler metal has been reduced to its final diameter and all processing operations have been completed. Analysis of the other elements may be conducted on these samples or it may have been conducted on samples taken from the ingot or the rod stock from which the filler metal is made. In case of dispute, samples from the finished filler metal shall be the referee method.

CHEMICAL COMPOSITION REQUIREMENTS FOR TITANIUM AND TITANIUM ALLOY ELECTRODES AND RODS

d. Residual elements, total, shall not exceed 0.20 percent, with no single such element exceeding 0.05 percent. Residual elements need not be reported unless a report is specifically required by the purchaser. Residual elements are those elements (other than titanium) that are not listed in this table for the particular classification, but which are inherent in the raw material or the manufacturing practice. Residual elements can be present only in trace amounts and they cannot be elements that have been intentionally added to the product.

e. SAE/ASTM Unified Numbering System for Metals and Alloys.

SPECIFICATION CROSS INDEX[a]

AWS A5.16 Classification				
1990	**1970**	**Aerospace Materials Specification (AMS)**	**Military Specification (MIL)**	**ASTM/ASME Grades**
ERTi-1	ERTi-1	4951	MIL-R-81558	1
ERTi-2	ERTi-2	-	MIL-R-81558	2
ERTi-3	ERTi-3	-	MIL-R-81558	3
ERTi-4	ERTi-4	-	MIL-R-81558	4
ERTi-5	ERTi-6Al-4V	4954	-	5
ERTi-5ELI	ERTi-6Al-4V-1	4956	MIL-R-81558	-
ERTi-6	ERTi-5Al-2.5Sn	4953	-	6
ERTi-6ELI	ERTi-5Al-2.5Sn-1	-	MIL-R-81558	-
ERTi-7	ERTi-0.2Pd	-	-	7
ERTi-9	ERTi-3Al-2.5V	-	-	9
ERTi-9ELI	ERTi-3Al-2.5V-1	-	-	-
ERTi-12	ERTi-0.8Ni-0.3Mo	-	-	12
ERTi-15	ERTi-6Al-2Cb1Ta-1Mo	-	MIL-R-81558	-

a. Specifications are not exact duplicates. Information is supplied only for general comparison.

AWS A5.16 CLASSIFICATION SYSTEM

The system for identifying the filler metal classifications in this specification follows the standard pattern used in other AWS filler metal specifications. The letter "E" at the beginning of each classification designation stands for electrode, and the letter "R" stands for welding rod. Since these filler metals are used as electrodes in gas metal arc welding and as rods in gas tungsten arc welding, both letters are used.

The chemical symbol "Ti" appears after "R" as a means of identifying the filler metals as unalloyed titanium or a titanium-base alloy. The numeral provides a means of identifying different variations in the composition. The filler letters "ELI" designate titanium alloy filler metals with extra low content of interstitial elements (carbon, oxygen, hydrogen, and nitrogen).

Designations for individual alloys in this revision of the specification are different from those used in earlier documents. With the exception of ERTi-15, specific alloys now are identified by a number similar to the grade designation used in ASTM/ASME specifications for corresponding base metals. In the absence of a grade number in general usage for the Ti-6Al-2Cb-1Ta-1Mo alloy, the number 15 was assigned arbitrarily to designate this classification of filler metal.

Chapter 21

TUNGSTEN & TUNGSTEN ALLOY WELDING FILLER METALS

AWS A5.12 CHEMICAL COMPOSITION REQUIREMENTS FOR ELECTRODES[a]

CHEMICAL COMPOSITION REQUIREMENTS FOR ELECTRODES[a]		
AWS A5.12 Classification	**UNS Number[b]**	**Composition, Weight Percent**
EWP	R07900	W min. (difference)[c] 99.5 Other oxides or elements total 0.5
EWCe-2	R07932	W min. (difference)[c] 97.3 CeO_2 1.8-2.2 Other oxides or elements total 0.5
EWLa-1	R07941	W min. (difference)[c] 98.3 La_2O_3 0.8-1.2 Other oxides or elements total 0.5
EWLa-1.5	R07942	W min. (difference)[c] 97.8 La_2O_3 1.3-1.7 Other oxides or elements total 0.5
EWLa-2	R07943	W min. (difference)[c] 97.3 La_2O_3 1.8-2.2 Other oxides or elements total 0.5
EWTh-1	R07911	W min. (difference)[c] 98.3 $ThO_2$0.8-1.2 Other oxides or elements total 0.5
EWTh-2	R07912	W min. (difference)[c] 97.3 ThO_2 1.7-2.2 Other oxides or elements total 0.5
EWZr-1	R07920	W min. (difference)[c] 99.1 ZrO_2 0.15-0.40 Other oxides or elements total 0.5
EWG[d]	---	W min. (difference)[c] 94.5 CeO_2, La_2O_3, ThO_2, ZrO_2 Not specified Other oxides or elements total 0.5

a. The electrode shall be analyzed for the specific oxides for which values are shown in this table. If the presence of other elements or oxides is indicated in the course of this work, the amount of those elements or oxides shall be determined to ensure that their total does not exceed the limit specified for "Other oxides or elements total".
b. SAE/ASTM Unified Numbering System for Metals and Alloys.
c. Tungsten content shall be determined by subtracting the total of all specified oxides and other oxides and elements from 100%.
d. Classification EWG must contain some compound or element additive and the manufacturer must identify the type and nominal content of the additive on the packaging.

TYPICAL CURRENT RANGES FOR AWS A5.12 TUNGSTEN ELECTRODES[a]

Electrode Diameter		Amperes					
		DCEN (DCSP)	DCEP (DCRP)	Alternating Current Unbalanced Wave		Alternating Current Balanced Wave	
in.	mm	EWX-X	EWX-X	EWP	EWX-X	EWP	EWX-X
0.010	0.30	Up to 15	na[b]	Up to 15	Up to 15	Up to 15	Up to 15
0.020	0.50	5-20	na[b]	10-20	5-20	5-15	5-20
0.040	1.00	15-80	na[b]	20-60	15-80	10-30	20-60
0.060	1.60	70-150	10-20	50-100	70-150	30-80	60-120
0.093	2.40	150-250	15-30	100-160	140-235	60-130	100-180
0.125	3.20	250-400	25-40	150-200	225-325	100-180	160-250
0.156	4.00	400-500	40-55	200-275	300-400	160-240	200-320
0.187	5.00	500-750	55-80	250-350	400-500	190-300	290-390
0.250	6.40	750-1000	80-125	325-450	500-630	250-400	340-525

a. All values are based on the use of argon gas. Other current values may be employed depending on the shielding gas, type of equipment and application.
b. na = not applicable

AWS A5.12 CLASSIFICATION SYSTEM

The system for identifying the electrode classifications in this specification follows the standard pattern used in other AWS filler metal specifications. The letter "E" at the beginning of the classification designation stands for electrode. The "W" indicates that the electrode is primarily tungsten. The "P" indicates that the electrode is essentially pure tungsten and contains no intentionally added alloying elements. The "Ce", "La", "Th", and "Zr" indicate that the electrode is alloyed with oxides of cerium, lanthanum, thorium, or zirconium, respectively. The numeral at the end of some of the classifications indicates a different chemical composition level or product within a specific group.

This specification includes electrodes classified as EWG. The "G" indicates that the electrode is of a general classification. It is "general" because not all of the particular requirements specified for each of the other classifications are specified for this classification. The intent, in establishing this classification, is to provide a means by which electrodes that differ in one respect or another (chemical composition, for example) from other classifications (meaning that the composition of the electrode - in the case of this example - does not meet the composition specified for any of the classifications in the specification) can still be classified according to the specification. The purpose is to allow a useful electrode - one that otherwise would have to await a revision of the specification - to be classified immediately, under the existing specification. This means, then, that two electrodes - each bearing the same "G" classification - may be quite different in some certain respect. To prevent the confusion that this situation could create, this specification requires the manufacturer to identify, in the label, the type and nominal content of the alloy addition made in the particular product.

Chapter

22

ZIRCONIUM & ZIRCONIUM ALLOY WELDING FILLER METALS

AWS A5.24 CHEMICAL COMPOSITION REQUIREMENTS FOR ZIRCONIUM AND ZIRCONIUM ELECTRODES AND RODS

CHEMICAL COMPOSITION REQUIREMENTS FOR ZIRCONIUM AND ZIRCONIUM ELECTRODES AND RODS		
AWS A5.24 Classification	**UNS Number[b]**	**Composition, Weight Percent[a]**
ERZr2	R60702	Zr + Hf 99.01 min Hf 4.5 Fe + Cr 0.20 O 0.016 H 0.005 N 0.025 C 0.05
ERZr3	R60704	Zr + Hf 97.5 min Hf 4.5 Fe + Cr 0.20 to 0.40 Sn 1.00 to 2.00 O 0.016 H 0.005 N 0.025 C 0.05
ERZr4	R60705	Zr + Hf 95.5 min Hf 4.5 Fe + Cr 0.20 O 0.016 H 0.005 N 0.025 C 0.05 Cb 2.0 to 3.0

a. Single values are maximum, except as noted.
b. SAE/ASTM Unified Numbering System for Metals and Alloys.
c. Analysis of the interstitial elements C, O, H and N shall be conducted on samples of filler metal taken after the filler meal has been reduced to its final diameter and all processing operations have been completed. Analysis of the other elements may be conducted on these same samples or it may have been conducted on samples taken from the ingot or the rod stock from which the filler metal is made. In case of dispute, samples from the finished filler metal shall be the referee method.7

AWS A5.24 CLASSIFICATION SYSTEM

The system of classification is similar to that used in other filler metal specifications. The letter "E" at the beginning of each designation indicates a welding electrode, and the letter "R" indicates a welding rod. Since these filler metals are used as welding electrodes in gas metal arc welding and as welding rods in gas tungsten arc welding, both letters are used.

The letters "Zr" indicate that the filler metals have a zirconium base. The digits and letters that follow provide a means for identifying the nominal composition of the filler metal.

Chapter 23

SOLID & COMPOSITE SURFACING FILLER METALS

AWS A5.13 CHEMICAL REQUIREMENTS FOR BARE SURFACING WELDING RODS AND ELECTRODES[d]

CHEMICAL REQUIREMENTS FOR BARE SURFACING WELDING RODS AND ELECTRODES[d,e]	
AWS A5.13 Classification	**Composition, Weight Percent**
RFe5-A	C 0.7 to 1.0 Mn 0.50 W 5.0 to 7.0 Cr 3.0 to 5.0 Mo 4.0 to 6.0 Se Remainder V 1.0 to 2.5 Si 0.5 Total Other Elements 1.0
RFe5-B	C 0.5 to 0.9 Mn 0.50 W 1.0 to 2.5 Cr 3.0 to 5.0 Mo 5.0 to 9.5 Se Remainder V 0.8 to 1.3 Si 0.5 Total Other Elements 1.0
RFeCr-A1	C 3.7 to 5.0 Mn 2.0 to 6.0 Cr 27.0 to 35.0 Se Remainder Si 1.10 to 2.5 Total Other Elements 1.0
RCoCr-A	C 0.9 to 1.4 Mn 1.00 Co Remainder W 3.0 to 6.0 Ni 3.0 Cr 26.0 to 32.0 Mo 1.0 Se 3.0 Si 2.0 Total Other Elements 0.50
RCoCr-B	C 1.2 to 1.7 Mn 1.00 Co Remainder W 7.0 to 9.5 Ni 3.0 Cr 26.0 to 32.0 Mo 1.0 Se 3.0 Si 2.0 Total Other Elements 0.50
RCoCr-C	C 2.0 to 3.0 Mn 1.00 Co Remainder W 11.0 to 14.0 Ni 3.0 Cr 26.0 to 33.0 Mo 1.0 Se 3.0 Si 2.0 Total Other Elements 0.50
RCuZn-E[b]	Mn 0.30 Fe 1.50 Cu 56.0 min Al 0.01[a] Zn Remainder Si 0.04 to 0.25 Pb 0.05[a] Sn 2.00 to 3.00 Total Other Elements 0.50
ERCuSi-A[b]	Mn 1.5[c] Ni[a] Se 0.5 Cu 94.0 min Al 0.01[a] Zn 1.5[a] Si 2.8 to 4.0 Pb 0.02[a] 1.5[a] P [a] Total Other Elements 0.50
ERCuAl-A2[b]	Fe 1.5 Cu Remainder Al 9.0 to 11.0 Zn 0.02 Si 0.10 Pb 0.02[a] Total Other Elements 0.50
ERCuAl-A3	Fe 3.0 to 5.0 Cu Remainder Al 10.0 to 11.0 Zn 0.10 Si 0.10 Pb 0.02[a] Total Other Elements 0.50
RCuAl-C	Fe 3.0 to 5.0 Cu Remainder Al 12.0 to 13.0 Zn 0.02 Si 0.4 Pb 0.02 Total Other Elements 0.50
RCuAl-D	Fe 3.0 to 5.0 Cu Remainder Al 13 to 14.0 Zn 0.02 Si 0.04 Pb 0.02 Total Other Elements 0.50
RCuAl-E	Fe 3.0 to 5.0 Cu Remainder Al 14.0 to 15.0 Zn 0.02 Si 0.4 Pb 0.02 Total Other Elements 0.50
ERCuSn-A[b]	Mn[a] Ni[a] Fe[a] Cu 93.5 min Al 0.01[a] Zn[a] Si[a] Pb 0.02[a] Sn 4.0 to 6.0 P 0.10 to 0.35 Total Other Elements 0.50
RCuSn-D	Cu 88.5 min Al 0.01[a] Pb 0.05[a] Sn 9.0 to 11.0 P 0.10 to 0.30 Total Other Elements 0.50
RNiCr-A	C 0.30 to 0.60 Co 1.50 Ni Remainder Cr 8.0 to 14.0 Fe 1.25 to 3.25 V 2.00 to 3.00 percent boron Si 1.25 to 3.25 Total Other Elements 0.50
RNiCr-B	C 0.40 to 0.80 Co 1.25 Ni Remainder Cr 10.0 to 16.0 Fe 3.00 to 5.00 V 2.00 to 4.00 percent boron Si 3.00 to 5.00 Total Other Elements 0.50
RNiCr-C	C 0.50 to 1.00 Co 1.00 Ni Remainder Cr 12.0 to 18.0 Fe 3.50 to 5.50 V 2.50 to 4.50 percent boron Si 3.50 to 5.50 Total Other Elements 0.50

Chapter 24

CONSUMABLE INSERTS

AWS A5.30 CHEMICAL COMPOSITION PERCENT – CARBON STEEL

CHEMICAL COMPOSITION PERCENT – CARBON STEEL			
	AWS A5.30 Classification	**UNS Number[c]**	**Composition, Weight Percent[a,b]**
Group A	INMs1	K10726	C 0.07 Mn 0.90 to 1.40 P 0.025 S 0.035 Si 0.40 to 0.70 Al 0.05[d] to 0.15 Zr 0.02[d] to 0.12 Ti 0.05[d] to 0.15
	INMs2	K01313	C 0.06 to 0.15 Mn 0.90 to 1.40 P 0.025 S 0.035 Si 0.45 to 0.70
	INMs3	K11140	C 0.07 to 0.15 Mn 1.40 to 1.85 P 0.025 S 0.035 Si 0.80 to 1.15

a. The consumable insert shall be analyzed for the specific elements for which values are shown in the table.
b. Single values are maximum
c. SAE/ASTM Unified Numbering System for Metals and Alloys. d. Al + Zr + Ti = 0.15 minimum.

CHEMICAL COMPOSITION – CHROMIUM-MOLYBDENUM STEELS			
	AWS A5.30 Classification	**UNS Number[c]**	**Composition, Weight Percent[a,b]**
Group B	IN502	S50280	C 0.10 Mn 0.40 to 0.75 P 0.025 S 0.025 Si 0.25 to 0.50 Al 0.15 Cr 4.5 to 6.0 Mo 0.45 to 0.65, Ni 0.6 Cu 0.25 Fe rem
	IN515	K20900	C 0.07-0.12 Mn 0.40 to 0.70 P 0.025 S 0.025 Si 0.40 to 0.70 Al 0.15 Cr 1.20 to 1.50 Mo 0.40 to 0.65 Ni 0.20 Cu 0.35 Fe rem Total Other Elements 0.50
	IN521	K30960	C 0.07-0.12 Mn 0.40 to 0.70 P 0.025 S 0.025 Si 0.40 to 0.70 Al 0.15 Cr 2.30 to 2.70 Mo 0.90 to 1.20 Ni 0.20 Cu 0.35 Fe rem Total Other Elements 0.50

a. The consumable insert shall be analyzed for the specific elements for which values are shown in this table. If the presence of other elements is indicated in the course of this work, the amount of those elements shall be determined to ensure that their total does not exceed the limit specified for "Other Elements, Total" in the last item of the table.
b. Singles values are maximum.
c. SAE/ASTM Unified Numbering System for Metals and Alloys.
rem: remainder

DIMENSIONS OF CLASS 3, STYLE E INSERTS (Continued)								
Pipe Dimensions					Ring Diameters[a]			
Nominal Diameter		Schedule	Inside Diameter[a]		Ring OD for Nominal Pipe Dia.		Ring ID for Nominal Pipe Dia.	
in.	mm	Number[b]	in.	mm	in.	mm	in.	mm
2	51.0	5S	2.245	57.02	2.40	61.0	2.15	54.6
		10S	2.157	54.79	2.30	58.7	2.06	52.3
		40	2.067	52.50	2.22	56.4	1.97	50.0
		80	1.939	49.25	2.10	53.3	1.85	47.0
2½	64	5S	2.709	68.81	2.87	72.9	2.62	66.5
3	76	5S	3.334	84.68	3.49	88.6	3.24	82.3
3½	89	5S	3.834	97.38	3.99	101.3	3.74	95.0
4	102	5S	4.334	110.08	4.49	114.0	4.24	107.7

a. Class 3, style E insert rings are normally furnished to match the nominal internal diameter of the pipe. For Class 3 Style E insert rings required for use with specially I.D. machined pipe end joint preparations, the dimensions are determined as follows:
Ring ID (inside diameter) = pipe ID - 0.094 in. (2.38 mm)
Ring OD (outside diameter) = ring ID + 0.250 in. (6.35 mm)

b. Schedule number followed by "S" applies to Group C types.

AWS A5.30 CLASSIFICATION SYSTEM

The classification system used in this specification follows, as closely as possible, the standard pattern used in other AWS filler metal specifications. The inherent nature of the products being classified has, however, necessitated specific changes that more precisely classify the product. As an example, consider IN308. The prefix "IN" designates a consumable insert. The numbers 308 designate the chemical composition.

The consumable inserts are classified on the basis of their chemical composition. However, their cross-sectional configuration is another consideration that must be selected and specified when ordering.

Chapter

25

BRAZING FILLER METALS & FLUXES

CHEMICAL COMPOSITION REQUIREMENTS FOR SILVER FILLER METALS (Continued)		
AWS A5.8 Classification	**UNS Number[a]**	**Composition, Weight Percent**
BAg-23	P07850	Ag 84.0-86.0 Mn Remainder Other Elements Total[b] 0.15
BAg-24	P07505	Ag 49.0-51.0 Cu 19.0-21.0 Zn 26.0-30.0 Ni 1.5-2.5 Other Elements Total[b] 0.15
BAg-26	P07250	Ag 24.0-26.0 Cu 37.0-39.0 Zn 31.0-35.0 Ni 1.5-2.5 Mn 1.5-2.5 Other Elements Total[b] 0.15
BAg-27	P07251	Ag 24.0-26.0 Cu 34.0-36.0 Zn 24.5-28.5 Cd 12.5-14.5 Other Elements Total[b] 0.15
BAg-28	P07401	Ag 39.0-41.0 Cu 29.0-31.0 Zn 26.0-30.0 Sn 1.5-2.5 Other Elements Total[b] 0.5
BAg-33	P07252	Ag 24.0-26.0 Cu 29.0-31.0 Zn 26.5-28.5 Cd 16.5-18.5 Other Elements Total[b] 0.15
BAg-34	P07380	Ag 37.0-39.0 Cu 31.0-33.0 Zn 26.0-30.0 Sn 1.5-2.5 Other Elements Total[b] 0.15
BAg-35	P07351	Ag 34.0-36.0 Cu 31.0-33.0 Zn 31.0-35.0 Other Elements Total[b] 0.15
BAg-36	P07454	Ag 44.0-46.0 Cu 26.0-28.0 Zn 23.0-27.0 Sn 2.5-3.5 Other Elements Total[b] 0.15
BAg-37	P07253	Ag 24.0-26.0 Cu 39.0-41.0 Zn 31.0-35.0 Sn 1.5-2.5 Other Elements Total[b] 0.15

a. SAE/ASTM Unified Numbering System for Metals and Alloys.

b. The brazing filler metal shall be analyzed for those specific elements for which values are shown in this table. If the presence of other elements is indicated in the course of this work, the amount of those elements shall be determined to ensure that their total does not exceed the limit specified.
See AWS A5.8 Table A2 for discontinued brazing filler metal classification.
See AWS A5.8 Table 6 for the following Ag classifications not included here: BVAg-0, BVAg-6b, BVAg-8b, BVAg-29 to BVAg-32.

CHEMICAL COMPOSITION REQUIREMENTS FOR GOLD FILLER METALS		
AWS A5.8 Classification	**UNS Number[a]**	**Composition, Weight Percent**
BAu-1	P00375	Au 37.0-38.0 Cu Remainder Other Elements Total[b] 0.15
BAu-2	P00800	Au 79.5-80.5 Cu Remainder Other Elements Total[b] 0.15
BAu-3	P00350	Au 34.5-35.5 Cu Remainder Other Elements Total[b] 0.15
BAu-4	P00820	Au 81.5-82.5 Ni Remainder Other Elements Total[b] 0.15
BAu-5	P00300	Au 29.5-30.5 Pd 33.5-34.5 Ni 35.5-36.5 Other Elements Total[b] 0.15
BAu-6	P00700	Au 69.5-70.5 Pd 7.5-8.5 Ni 21.5-22.5 Other Elements Total[b] 0.15

a. SAE/ASTM Unified Numbering System for Metals and Alloys.

b. The brazing filler metal shall be analyzed for those specific elements for which values are shown in this table. If the presence of other elements is indicated in the course of this work, the amount of those elements shall be determined to ensure that their total does not exceed the limit specified.

AWS A5.31 CLASSIFICATION SYSTEM

The system for identifying the flux classifications in this specification is based on three factors: applicable base metal, applicable filler metal, and activity temperature range. The letters FB at the beginning of each classification designation stands for "Flux for Brazing or Braze Welding". The third character is a number that stands for a group of applicable base metals. The fourth character, a letter, designates a change in form and attendant composition within the broader base metal classification.

Chapter 26

WELDING SHIELDING GASES

AWS A5.32/A5.32M WELDING SHIELDING GASES

GAS TYPE, PURITY, AND DEW POINT REQUIREMENTS FOR SHIELDING GAS COMPONENTS

Gas	AWS Classification	Product State	Minimum Purity (percent)	Maximum Moisture[a] (ppm)	Dew Point Maximum Moisture at 1 Atmosphere °F	Dew Point Maximum Moisture at 1 Atmosphere °C	CGA Class
Argon	SG-A	Gas	99.997	10.5	-76	-60	Type I, G-11.1 Grade C
		Liquid	99.997	10.5	-76	-60	Type II, G-11.1 Grade C
Carbon Dioxide	SG-C	Gas	99.8	32	-60	-51	G-6.2, Grade H
		Liquid	99.8	32	-60	-51	
Helium	SG-He	Gas	99.995	15	-71	-57	Type I, G-9.1 Grade L
		Liquid	99.995[b]	15	-71	-57	Type II, G-9.1 Grade L
Hydrogen	SG-H	Gas	99.95	32	-60	-51	Type I, G-5.3 Grade B
		Liquid	99.995[c]	32	-60	-51	Type II, G-5.3 Grade A
Nitrogen	SG-N	Gas	99.9	32	-60	-51	Type I, G-10.1 Grade F
		Liquid	99.998	4	-90	-68	Type II, G-10.1 Grade L
Oxygen	SG-O	Gas	99.5	50 ppm	-54	-48	Type I, G-4.3 Grade C
		Liquid	99.5	6.6 ppm	-82	-63	Type II, G-4.3 Grade B

a. Moisture specifications are guaranteed at full cylinder pressure, at which the cylinder is analyzed.
b. Including neon.
c. Including helium.

Chapter

27

LIST OF INTERNATIONAL FILLER METAL STANDARDS

AMERICAN AWS - FILLER METAL SPECIFICATIONS	
AWS	**Title**
A5.01	Filler Metal Procurement Guidelines
A5.1	Specification for Carbon Steel Electrodes for Shielded Metal Arc Welding
A5.2	Specification for Carbon and Low Alloy Steel Rods for Oxyfuel Gas Welding
A5.3	Specification for Aluminum and Aluminum Alloy Electrodes for Shielded Metal Arc Welding
A5.4	Specification for Stainless Steel Electrodes for Shielded Metal Arc Welding
A5.5	Specification for Low Alloy Steel Covered Arc Welding Electrodes
A5.6	Specification for Covered Copper and Copper Alloy Arc Welding Electrodes
A5.7	Specification for Copper and Copper Alloy Bare Welding Rods and Electrodes
A5.8	Specification for Filler Metals for Brazing and Braze Welding
A5.9	Specification for Bare Stainless Steel Welding Electrodes and Rods
A5.10	Specification for Bare Aluminum and Aluminum Alloy Welding Electrodes and Rods
A5.11	Specification for Nickel and Nickel Alloy Welding Electrodes for Shielded Metal Arc Welding
A5.12	Specification for Tungsten and Tungsten Alloy Electrodes for Arc Welding and Cutting
A5.13	Specification for Solid Surfacing Welding Rods and Electrodes
A5.14	Specification for Nickel and Nickel Alloy Bare Welding Electrodes and Rods
A5.15	Specification for Welding Electrodes and Rods for Cast Iron
A5.16	Specification for Titanium and Titanium Alloy Welding Electrodes and Rods
A5.17	Specification for Carbon Steel Electrodes and Fluxes for Submerged Arc Welding
A5.18	Specification for Carbon Steel Electrodes and Rods for Gas Shielded Arc Welding
A5.19	Specification for Magnesium Alloy Welding Electrodes and Rods
A5.20	Specification for Carbon Steel Electrodes for Flux Cored Arc Welding
A5.21	Specification for Composite Surfacing Welding Rods and Electrodes
A5.22	Specification for Flux Cored Corrosion-Resisting Chromium and Chromium-Nickel Steel Electrodes
A5.23	Specification for Low Alloy Steel Electrodes and Fluxes for Submerged Arc Welding
A5.24	Specification for Zirconium and Zirconium Alloy Welding Electrodes and Rods
A5.25	Specification for Carbon and Low Alloy Steel Electrodes and Fluxes for Electroslag Welding
A5.26	Specification for Carbon and Low Alloy Steel Electrodes for Electrogas Welding

Chapter

28

EUROPEAN DATA (EN) CARBON & LOW ALLOY STEEL FILLER METALS

EN 440 WIRE ELECTRODES AND DEPOSITS FOR GAS SHIELDED METAL ARC WELDING OF NON ALLOY AND FINE GRAIN STEELS

EN 440 –CHEMICAL COMPOSITION OF WIRE ELECTRODES	
Symbol	**Chemical Composition[a,b,c]**
G0	Any agreed analysis not specified in this standard
G2Si	C 0,06-0,14 Si 0,50-0,80 Mn 0,90-1,30 P 0,025 S 0,025 Ni 0,15 Mo 0,15 Al 0,02 Ti+Zr 0,15
G3Si1	C 0,06-0,14 Si 0,70-1,00 Mn 1,30-1,60 P 0,025 S 0,025 Ni 0,15 Mo 0,15 Al 0,02 Ti+Zr 0,15
G4Si1	C 0,06-0,14 Si 0,80-1,20 Mn 1,60-1,90 P 0,025 S 0,025 Ni 0,15 Mo 0,15 Al 0,02 Ti+Zr 0,15
G3Si2	C 0,06-0,14 Si 1,00-1,30 Mn 1,30-1,60 P 0,025 S 0,025 Ni 0,15 Mo 0,15 Al 0,02 Ti+Zr 0,15
G2Ti	C 0,04-0,14 Si 0,40-0,80 Mn 0,90-1,40 P 0,025 S 0,025 Ni 0,15 Mo 0,15 Al 0,05-0,20 Ti+Zr 0,05-0,25
G3Ni1	C 0,06-0,14 Si 0,50-0,90 Mn 1,00-1,60 P 0,020 S 0,020 Ni 0,80-1,50 Mo 0,15 Al 0,02 Ti+Zr 0,15
G2Ni2	C 0,06-0,14 Si 0,40-0,80 Mn 0,80-1,40 P 0,020 S 0,020 Ni 2,10-2,70 Mo 0,15 Al 0,02 Ti+Zr 0,15
G2Mo	C 0,08-0,12 Si 0,30-0,70 Mn 0,90-1,30 P 0,020 S 0,020 Ni 0,15 Mo 0,40-0,60 Al 0,02 Ti+Zr 0,15
G4Mo	C 0,06-0,14 Si 0,50-0,80 Mn 1,70-2,10 P 0,025 S 0,025 Ni 0,15 Mo 0,40-0,60 Al 0,02 Ti+Zr 0,15
G2Al	C 0,08-0,14 Si 0,30-0,50 Mn 0,90-1,30 P 0,025 S 0,025 Ni 0,15 Mo 0,15 Al 0,35-0,75 Ti+Zr 0,15

a. If not specified Cr ≤ 0,15, Cu ≤ 0,35 and V ≤ 0,03. Residual copper content in the steel plus any coating shall not exceed 0,35.
b. Single values shown in the table are maximum values.
c. The results shall be rounded to the same number of significant figures as in the specified value using the rules according to ISO 310, annex B, Rule A.

EN 440 – DESIGNATION SYSTEM

A weld deposit produced by gas-shielded metal arc welding having a minimum yield strength of 460 N/mm^2 (46) and a minimum average impact energy of 47 J at – 30 ^{o}C (3) under mixed gas using the wire G3Si1 is designated:

EN 440 – G 46 3 M G3Si1

A wire electrode complying with the chemical requirement of G3Si1 is designated:

EN 440 – G3Si1

where:

EN 440 = Standard number
G = Wire electrode and/or deposit/gas shielded metal arc welding
46 = Strength and elongation
3 = Impact properties
M = Shielding gas
G3Si1 = Chemical composition of the wire electrode

Covered Electrodes for Manual Metal Arc Welding of Non Alloy and Fine Grain Steels

prEN 12535 TUBULAR CORED ELECTRODES FOR GAS SHIELDED METAL ARC WELDING OF HIGH STRENGTH STEELS

prEN 12535 – SYMBOL FOR CHEMICAL COMPOSITION OF ALL-WELD METAL	
Symbol	**Chemical Composition[a,b,c]**
MnMo	Mn 1,4-2,0 Mo 0,3-0,6
Mn1Ni	Mn 1,1-1,8 Ni 0,6-1,2
Mn1, 5Ni	Mn 1,1-1,8 Ni 1,3-1,8
Mn2, 5Ni	Mn 1,1-2,0 Ni 2,1-3,0
1NiMo	Mn 1,4 Ni 0,6-1,2 Mo 0,3-0,6
1, 5NiMo	Mn 1,6 Ni 1,2-1,8 Mo 0,3-0,7
2NiMo	Mn 1,6 Ni 1,6-2,4 Mo 0,3-0,7
Mn1NiMo	Mn 1,3-2,0 Ni 0,6-1,2 Mo 0,3-0,7
Mn2NiMo	Mn 1,3-2,1 Ni 1,8-2,6 Mo 0,3-0,7
Mn2NiCrMo	Mn 1,4-2,0 Ni 1,8-2,6 Cr 0,3-0,6 Mo 0,3-0,6
Mn2Ni1CrMo	Mn 1,4-2,1 Ni 1,8-2,6 Cr 0,6-1,0 Mo 0,3-0,6
z	Any other agreed composition

a. If not specified C 0,03-0,10, Cr < 0,2, Cu < 0,3, Mo < 0,2, Nb < 0,05, Ni < 0,3, P < 0,020, S < 0,020 and V < 0.05.
b. Single values shown in the table are maximum values.
c. The results shall be rounded to the same number of significant figures as in the specified value using the rules in accordance with annex B, Rule A of ISO 31-0:1992.

prEN 12535 – SYMBOL FOR STRENGTH AND ELONGATION OF ALL-WELD METAL			
Symbol	**Minimum Yield Strength[a] N/mm^2**	**Tensile Strength N/mm^2**	**Minimum Elongation[b] %**
55	550	610 – 780	18
62	620	690 – 890	18
69	690	760 – 960	17
79	790	880 – 1080	16
89	890	980 - 1180	15

a. For yield strength the lower yield (R_{eL}) shall be used when yielding occurs, otherwise the 0,2 % proof strength ($R_{po,2}$) shall be used.

b. Gauge length is equal to five times the specimen diameter.

prEN 12535 – SYMBOL FOR IMPACT PROPERTIES OF ALL-WELD METAL[a]	
Symbol	**Temperature for minimum average impact energy of 47 J °C**
Z	No requirement
A	+ 20
0	0
2	- 20
3	- 30
4	- 40
5	- 50
6	- 60

a. Stress relief treatment may alter the impact properties of the weld metal from that obtained in the as-welded condition.

Chapter

29

EUROPEAN DATA (EN) STAINLESS STEEL WELDING FILLER METALS

prEN 1600 – SYMBOL FOR CHEMICAL COMPOSITION OF ALL-WELD METAL (Continued)	
Alloy Symbol	**Chemical Composition[a,b,c]**
Fully Austenitic. High Corrosion Resistance (Continued)	
20 25 5 Cu N L[g]	C 0,04 Si 1,2 Mn 1,0-4,0 P 0,030[d] S 0,025[d] Cr 19,0-22,0 Ni 24,0-27,0[e] Mo 4,0-7,0[e] Other 1,0-2,0 Cu[e]; 0,25 N[e]
20 16 3 Mn N L[g]	C 0,04 Si 1,2 Mn 5,0-8,0 P 0,035[d] S 0,025[d] Cr 18,0-21,0 Ni 15,0-18,0[e] Mo 2,5-3,5[e] Other 0,20 N[e]
25 22 2 N L[g]	C 0,04 Si 1,2 Mn 1,0-5,0 P 0,030[d] S 0,025[d] Cr 24,0-27,0 Ni 20,0-23,0[e] Mo 2,0-3,0[e] Other 0,20 N[e]
27 31 4 Cu L[g]	C 0,04 Si 1,2 Mn 2,5 P 0,030[d] S 0,025[d] Cr 26,0-29,0 Ni 30,0-33,0[e] Mo 3,0-4,5[e] Other 0,6-1,5 Cu[e]
Special Types	
18 8 Mn[g]	C 0,20 Si 1,2 Mn 4,5-7,5 P 0,035[d] S 0,025[d] Cr 17,0-20,0 Ni 7,0-10,0 [e]
18 9 Mn Mo	C 0,04-0,14 Si 1,2 Mn 3,0-5,0 P 0,035[d] S 0,025[d] Cr 18,0-21,5 Ni 9,0-11,0[e] Mo 0,5-1,5[e]
20 10 3	C 0,10 Si 1,2 Mn 2,5 P, 030[d] S 0,025[d] Cr 18,0-21,0 Ni 9,0-12,0[e] Mo 1,5-3,5[e]
23 12 L	C 0,04 Si 1,2 Mn 2,5 P, 030[d] S 0,025[d] Cr 22,0-25,0 Ni 11,0-14,0[e]
23 12 Nb	C 0,10 Si 1,2 Mn 2,5 P, 030[d] S 0,025[d] Cr 22,0-25,0 Ni 11,0-14,0[e] Nb[f]
23 12 2 L	C 0,04 Si 1,2 Mn 2,5 P, 030[d] S 0,025[d] Cr 22,0-25,0 Ni 11,0-14,0[e] Mo 2,0-3,0[e]
29 9	C 0,15 Si 1,2 Mn 2,5 P, 035[d] S 0,025[d] Cr 27,0-31,0 Ni 8,0-12,0[e]
Heat Resisting Types	
16 8 2	C 0,08 Si 1,0 Mn 2,5 P 0,030[d] S 0,025[d] Cr 14,5-16,5 Ni 7,5-9,5[e] Mo 1,5-2,5[e]
19 9 H	C 0,04-0,08 Si 1,2 Mn 2,0 P 0,030[d] S 0,025[d] Cr 18,0-21,0 Ni 9,0-11,0[e]
25 4	C 0,15 Si 1,2 Mn 2,5 P 0,030[d] S 0,025[d] Cr 24,0-27,0 Ni 4,0-6,0[e]
22 12	C 0,15 Si 1,2 Mn 2,5 P 0,030[d] S 0,025[d] Cr 20,0-23,0 Ni 10,0-13,0[e]
25 20[g]	C 0,06-0,20 Si 1,2 Mn 1,0-5,0 P 0,030[d] S 0,025[d] Cr 23,0-27,0 Ni 18,0-22,0[e]
25 20 H[g]	C 0,35-0,45 Si 1,2 Mn 2,5 P 0,030[d] S 0,025[d] Cr 23,0-27,0 Ni 18,0-22,0[e]
18 36[g]	C 0,25 Si 1,2 Mn 2,5 P 0,030[d] S 0,025[d] Cr 14,0-18,0 Ni 33,0-37,0[e]

a. Single values shown in the table are maximum values.
b. Covered electrodes not listed in the table shall be symbolized similarly and prefixed by the letter Z.
c. The results shall be rounded to the same number of significant figures as in the specified value using Rule A in accordance with annex B of ISO 31-0:1992.

prEN 12072 – SYMBOL FOR CHEMICAL COMPOSITION OF WIRE ELECTRODES, WIRES AND RODS (Continued)	
Alloy Symbol	**Chemical Composition[a,b,c,d]**
Fully Austenitic (Continued)	
25 22 2 L[i]	C 0,03 Si 1,0 Mn 3,0-6,0 P 0,03[e] S 0,02[e] Cr 24,0-27,0 Ni 20,0-23,0[b] Mo 1,5-3,0[b] Other 0,10-0,20 N[b]
27 31 4 Cu L[i]	C 0,03 Si 1,0 Mn 1,0-3,0 P 0,03[e] S 0,02[e] Cr 26,0-29,0 Ni 30,0-33,0[b] Mo 3,0-4,5[b] Other 0,7-1,5 Cu[b]
Special Types	
18 8 Mn[i]	C 0,20 Si 1,2 Mn 5,8-8,0 P 0,03[e] S 0,03[e] Cr 17,0-20,0 Ni 7,0-10,0[b]
20 10 3	C 0,12 Si 1,0 Mn 1,0-2,5 P 0,03[e] S 0,02[e] Cr 18,0-21,0 Ni 8,0-12,0[b] Mo 1,5-3,5[b]
23 12 L[f]	C 0,03 Si 0,65 Mn 1,0-2,5 P 0,03[e] S 0,02[e] Cr 22,0-25,0 Ni 11,0-14,0[b]
23 12 Nb	C 0,08 Si 1,0 Mn 1,0-2,5 P 0,03[e] S 0,02[e] Cr 22,0-25,0 Ni 11,0-14,0[b] Other[b] Nb[g]
23 12 2 L	C 0,03 Si 1,0 Mn 1,0-2,5 P 0,03[e] S 0,02[e] Cr 21,0-25,0 Ni 11,0-15,0[b] Mo 2,0-3,5[b]
29 9	C 0,15 Si 1,0 Mn 1,0-2,5 P 0,03[e] S 0,02[e] Cr 28,0-32,0 Ni 8,0-12,0[b]
High Temperature Types	
16 8 2	C 0,10 Si 1,0 Mn 1,0-2,5 P 0,03[e] S 0,02[e] Cr 14,5-16,5 Ni 7,5-9,5[b] Mo 1,0-2,5[b]
19 9 H	C 0,04-0,08 Si 1,0 Mn 1,0-2,5 P 0,03[e] S 0,02[e] Cr 18,0-21,0 Ni 9,0-11,0[b]
19 12 3 H	C 0,04-0,08 Si 1,0 Mn 1,0-2,5 P 0,03[e] S 0,02[e] Cr 18,0-20,0 Ni 11,0-14,0[b] Mo 2,0-3,0[b]
22 12 H	C 0,04-0,15 Si 2,0 Mn 1,0-2,5 P 0,03[e] S 0,02[e] Cr 21,0-24,0 Ni 11,0-14,0[b]
25 4	C 0,15 Si 2,0 Mn 1,0-2,5 P 0,03[e] S 0,02[e] Cr 24,0-27,0 Ni 4,0-6,0[b]
25 20[i]	C 0,08-0,15 Si 2,0 Mn 1,0-2,5 P 0,03[e] S 0,02[e] Cr 24,0-27,0 Ni 18,0-22,0[b]
25 20 H[i]	C 0,35-0,45 Si 2,0 Mn 1,0-2,5 P 0,03[e] S 0,02[e] Cr 24,0-27,0 Ni 18,0-22,0[b]
18 36[i]	C 0,18-0,25 Si 0,4-2,0 Mn 1,0-2,5 P 0,03[e] S 0,02[e] Cr 15,0-19,0 Ni 33,0-37,0[b]

a. If not specified Mo < 0,75, Cu < 0,75 and Ni < 0,60.
b. Single values shown in the table are maximum values.
c. Wire electrodes not listed in the table shall be symbolized similarly and prefixed by the letter Z.
d. The results shall be rounded to the same number of significant figures as in the specified value using the rules according to ISO 31-0, annex B, Rule A.
e. The sum of P and S may not exceed 0,050 except for 25 7 2, 18 16 5 L, 20 16 3 Mn L, 18 8 Mn, and 29 9.
f. Si shall be added to the alloy symbol in case Si > 0,65-1,2.

prEN 12072 – SYMBOL FOR CHEMICAL COMPOSITION OF WIRE ELECTRODES, WIRES AND RODS (Continued)

g. Nb min. 10 x % C, max. 1,0 %; up to 20 % of the amount of Nb can be replaced by Ta.
h. Wire electrodes under this symbol are usually selected for specific properties and may not be directly interchangeable.
i. The all-weld metal is in most cases fully austenitic and therefore can be susceptible to microfissuring or hot cracking. The occurrence of fissuring/cracking is reduced by increasing the weld metal manganese level and in recognition of this, the manganese range is extended for a number of the grades.
j. N shall be added to the alloy symbol when N is added 0,10-0,20.

prEN 12072 – DESIGNATION SYSTEM

A wire electrode for gas shielded metal arc welding, also applicable to submerged arc welding, has a chemical composition within the limits for the alloy symbol 20 10 3.

The designation will be:

EN - G 20 10 3 and/or S 20 10 3

A rod for tungsten arc welding is designated:

EN - W 20 10 3

A wire electrode for gas shielded metal arc welding with a chemical composition 19 12 3 L with silicon > 0,65-1,2 % is designated:

EN - G 19 12 3 L Si

where:

EN = Standard number
G = Product/process symbol, G for gas shielded metal arc welding
19 12 3 L Si = Chemical composition of wire electrode

prEN 12073 – SYMBOL FOR WELDING POSITION

1) All positions.
2) All positions, except vertical down.
3) Flat butt weld, flat fillet weld, horizontal vertical fillet weld.
4) Flat butt weld, flat fillet weld.
5) Vertical down and positions according to symbol 3.

prEN 12073 – DESIGNATION SYSTEM

A tubular cored electrode (T) for gas shielded arc welding deposits a weld metal with a chemical composition within the limits for the alloy symbol 19 12 2. The electrode with a rutile type core (R) was tested under mixed gas (M) and may be used in flat butt and flat fillet welds (4).

The designation will be:

EN - T 19 12 3 L R M 4

Compulsory section:

EN - T 19 12 3 L R M

where:

EN = Standard number
T = Tubular cored electrode/metal arc welding
19 12 3 L = Chemical composition of the all-weld metal
R = Type of electrode core
M = Shielding gas
4 = Welding position

Chapter 30

INTERNATIONAL FILLER METAL CROSS REFERENCES

INTERNATIONAL CARBON STEEL COVERED ELECTRODE DATA

WFM No.	Typical Mechanical Properties[a] Strength (MPa)	Impact (J)	Temp. (°C)	Cross Reference Specifications
E4300	420	27	0	GB/7 5117 (E4300)
E4301	420	27	0	GB/7 5117 (E4301); JIS Z3211 (D4301); CEN EN499 (E35xRA12)
E4303	420	27	0	GB/7 5117 (E4303); JIS Z3211 (D4303); CEN EN499 (E35xRB12)
E4310	420	27	–30	AWS A5.1 (E6010); CSA W48.1 (E41010); IRAM-IAS U500-601 (E4310); AS/NZS 1553.1 (E4110-x); GB/7 5117 (E4310); CEN EN499 (E35xC21)`
E4311	420	27	–30	AWS A5.1 (E6011); CSA W48.1 (E41011); IRAM-IAS U500-601 (E4311); AS/NZS 1553.1 (E4111-x); GB/7 5117 (E4311); JIS Z3211 (D4311); CEN EN499 (E35xC11)
E4312	430			AWS A5.1 (E6012); CSA W48.1 (E41012); IRAM-IAS U500-601 (E4312); AS/NZS 1553.1 (E4112-Z); GB/7 5117 (E4312); CEN EN499 (E35ZR12)
E4313	430			AWS A5.1 (E6013); CSA W48.1 (E41013); IRAM-IAS U500-601 (E4313); AS/NZS 1553.1 (E4113-Z); GB/7 5117 (E4313); JIS Z3211 (D4313); CEN EN499 (E35ZR11)
E4315	420	27	–30	GB/7 5117 (E4315); CEN EN499 (E35xB22)
E4316	420	27	–30	GB/7 5117 (E4316); JIS Z3211 (D4316); CEN EN499 (E35xB32)
E4319	430	27	–20	AWS A5.1 (E6019); CEN EN499 (E35xRA12)
E4320	430			AWS A5.1 (E6020); AS/NZS 1553.1 (E4120-Z); GB/7 5117 (E4320); CEN EN499 (E35ZA13)
E4322	430			AWS A5.1 (E6022); CSA W48.1 (E41022); AS/NZS 1553.1 (E4122-Z); GB/7 5117 (E4322); CEN EN499 (E35ZA33)
E4323	420	27	0	GB/7 5117 (E4323)
E4324	420			GB/7 5117 (E4324); JIS Z3211 (D4324); CEN EN499 (E35ZRR54)
E4326	420	47	0	JIS Z3211 (D4326)
E4327	430	27	–30	AWS A5.1 (E6027); CSA W48.1 (E41027); AS/NZS 1553.1 (E4127-x); GB/7 5117 (E4327); JIS Z3211 (D4327); CEN EN499 (E35xRA54)
E4328	420	27	–20	GB/7 5117 (E4328); CEN EN499 (E35xB53)
E4340	420	27	0	JIS Z3211 (D4340)
E4800	490	47	0	JIS Z3212 (D5000)
E4801	490	27	0	GB/7 5117 (E5001); JIS Z3212 (D5001); CEN EN499 (E38xRA12)

INTERNATIONAL CARBON STEEL SOLID WIRE FOR GAS METAL ARC AND GAS TUNGSTEN ARC DATA

WFM No.[b]	Nominal Composition[a]				Cross Reference Specifications
	C	Mn	Si	Note	
S2031	0.06	1.0	0.6	c	AWS A5.18 (ER70S-2); CSA W48.4 (ER480S-2); AS 2717.1 (ES2); JIS Z3316 (YGT50); CEN EN440 (G2Ti)
S2130	0.1	1.0	0.6		AWS A5.18 (ER70S-3); CSA W48.4 (ER480S-3); AS 2717.1 (ES3); CEN EN440 (G2Si)
S2140	0.1	1.2	0.8		AWS A5.18 (ER70S-4); CSA W48.4 (ER480S-4); AS 2717.1 (ES4)
S2132	0.1	1.0	0.5	d	AWS A5.18 (ER70S-5); CSA W48.4 (ER480S-5); AS 2717.1 (ES5); CEN EN440 (G2Al)
S3140	0.1	1.5	0.9		AWS A5.18 (ER70S-6); CSA W48.4 (ER480S-6); AS 2717.1 (ES6); JIS Z3312 (YGW12); CEN EN440 (G3Si)
S3131	0.1	1.5	0.8	c	JIS Z3312 (YGW11)
S3130	0.1	1.8	0.7		AWS A5.18 (ER70S-7); CSA W48.4 (ER480S-7); AS 2717.1 (ES7)
S3132	0.1	1.6	0.7	c, e	JIS Z3312 (YGW13)
S4140	0.1	1.8	1.0		CEN EN440 (G3Si1)
S3140	0.1	1.5	1.2		CEN EN440 (G3Si2)
S3131	0.1	1.3	0.7	c	JIS Z3312 (YGW15)
S3130	0.1	1.3	0.7		JIS Z3312 (YGW16)

a. Caution: Nominal composition listed are for identification of comparable classifications. Check specifications for required properties. Products where Mn and Si are not specified (n.s.), WFM number inserts x in first and third numeric digits.
b. Initial “S” applies to solid wires; comparable metal cored wires may exist in some specifications and assigned WFM numbers with an initial “C.”
c. Nominal 0.1 each, Ti, Zr, Al.
d. Nominal Al = 0.6.
e. Nominal Al = 0.3.

INTERNATIONAL LOW ALLOY STEEL COVERED ELECTRODE DATA

WFM No.[b]	Typical Mechanical Properties[a]			Nominal Composition[a]						Cross Reference Specifications
	Strength (MPa)	Impact (J)	Temp. (°C)	C	Mn	Ni	Cr	Mo	Note	
E48xx-A1	480	Not specified		0.10	0.5			0.5		ISO 3580 (Mo); AWS A5.5 (E70xx-A1); CSA W48.3 (E480xx-A1); IRAM-IAS U500-127 (E48xx-A1); AS/NZS 1553.2 (E48xx-A1); GB/T 5118 (E50xx-A1); JIS Z3223 (DT1216); CEN EN1599 (EMo)
E55xx-B1	550	Not Specified		0.10	0.6		0.5	0.5		ISO 3580 (0,5CrMo); CSA W48.3 (E550xx-B1); IRAM-IAS U500-127 (E55xx-B1); AS/NZS 1553.2 (E55xx-B1); GB/T 5118 (E50xx-B1); CEN EN1599 (ECrMo0.5)
B55xx-B1V	550	Not Specified		0.10	1.0		0.5	1.0	V 0.4	ISO 3580 (0.5CrMoV); CEN EN1599 (EMoV)
E55xx-B2	550	Not Specified		0.10	0.6		1.2	0.5		ISO 3580 (1CrMo); AWS A5.5 (E80xx-B2); CSA W48.3 (E550xx-B2); IRAM-IAS U500-127 (E55xx-B2); AS/NZS 1553.2 (E55xx-B2); GB/T 5118 (E5515-B2); JIS Z3223 (DT2313); CEN EN1599 (ECrMo1)
B48xx-B21	480	Not Specified		0.04	0.6		1.2	0.5		AWS A5.5 (E70xx-B2L); CSA W48.3 (E480xx-B2L); IRAM-IAS U500-127 (E55xx-B2L); AS/NZS 1553.2 (E55xx-B2L); GB/T 5118 (E55xx-B2L); JIS Z3223 (DT23xx); CEN EN1599 (ECrMo1L)
E55xx-B2Nb	550	Not Specified		0.10	0.4		1.2	1.0	V 0.3, Nb 0.2	GB/T 5118 (E5515-B2VNb)
E55xx-B2V	550	Not Specified		0.10	0.6		1.2	0.5	V 0.3	ISO 3580 (1CrMoV); GB/T 5118 (E5515-B2V); CEN EN1599 (ECrMoV1)
E55xx-B2W	550	Not Specified		0.10	0.4		1.2	1.0	V 0.4, W 0.4	GB/T 5118 (E5515-B2VW)
E62xx-B3	620	Not Specified		0.10	0.6		2.2	1.0		ISO 3580 (2CrMo); AWS A5.5 (E90xx-B3); CSA W48.3 (E620xx-B3); IRAM-IAS U500-127 (E62xx-B3); AS/NZS 1553.2 (E62xx-B3); GB/T 5118 (E55xx-B3); JIS Z3223 (DT2413); CEN EN1599 (ECrMo2)

INTERNATIONAL LOW ALLOY SOLID STEEL WIRE FOR SUBMERGED ARC DATA (Continued)

WFM No.[b]	Nominal Composition[a]							Cross Reference Specifications
	C	Mn	Si	Ni	Cr	Mo	Note	
S2000-B4	0.12	1.2	0.2		3.3	1.0		JIS Z3351 (YS-3CM2)
S1000-B6	0.06	0.6	0.3		5.5	0.6		AWS A5.23 (EB6); AS 1858.2 (E5Cr); JIS Z3351 (YS-5CM1); CEN EN12070 (SCrMo5)
S1010-B6	0.06	0.6	0.5		5.5	0.6		CEN EN12070 (SCrMo5Si)
S2000-B6	0.10	1.2	0.4		5.5	0.6		JIS Z3351 (YS-5CM2)
S2200-B6	0.30	0.9	0.4		5.5	0.6		AWS A5.23 (EB6H); AS 1858.2 (EB6C)
S2010-B7	0.06	0.6			7.0	0.6		AS 1858.2 (E7Cr)
S2000-B8	0.06	0.4	0.4		9.3	1.0		AWS A5.23 (EB8); AS 1858.2 (E9Cr); CEN EN12070 (SCrMo9)
S2110-B8	0.06	0.6	0.6		9.3	1.0		CEN EN12070 (SCrMo9Si)
S2001-B9	0.10	1.0	0.2	0.5	9.0	0.9	d	AWS A5.23 (EB9); CEN EN12070 (SCrMo91)
S2201-B12	0.25	0.8	0.2	0.5	11.5	1.0	e	CEN EN12070 (SCrMiWV12)
S2211-B12	0.20	0.7	0.4	0.5	11.5	1.0	e	CEN EN12070 (SCrMoWV12Si)
S2000-N1	0.10	1.0	0.2	1.0				AWS A5.23 (ENi1); AS 1858.2 (ENi1); CEN EN756 (S2Ni1)
S2010-N1	0.10	1.1	0.6	1.0				AWS A5.23 (ENi1K)
S3000-N1	0.10	1.7	0.4	1.0				JIS Z3351 (YS-N1)
S2000-N1.5	0.10	1.0	0.2	1.5				CEN EN756 (S2Ni1,5)
S3000-N1.5	0.10	1.5	0.2	1.5				CEN EN756 (S3Ni1,5)
S2000-N2	0.10	1	0.2	2.3				AWS A5.23 (ENi2); AS 1858.2 (ENi2); JIS Z3351 (YS-N2); CEN EN756 (S2Ni2)
S2000-N3	0.10	0.9	0.2	3.5				AWS A5.23 (ENi3); AS 1858.2 (ENi3); CEN EN756 (S2Ni3)
S2002-NCM	0.20	0.8	0.2	0.6	0.5	0.2		AWS A5.23 (EF4); AS 1858.2 (EF4)
S4005-NCM1	0.10	1.8	0.2	1.0	0.4	0.5		JIS Z3351 (YS-NCM1)
S3005-NCM2	0.12	1.7	0.2	1.9	0.4	0.5		AWS A5.23 (EF6); AS 1858.2 (EF6); JIS Z3351 (YS-NCM2)
S3115-NCM2	0.06	1.6	0.4	2.3	0.5	0.4	f	AWS A5.23 (EM3); AS 1858.2 (EM3)
S4005-NCM3	0.13	2.0	0.4	2.5	0.4	0.5		AWS A5.23 (EF5); AS 1858.2 (EF5)
S4105-NCM3	0.10	1.8	0.4	2.5	0.6	0.6		JIS Z3351 (YS-NCM3)
S4105-NCM4	0.08	1.6	0.4	2.6	0.6	0.5	f	AWS A5.23 (EM4); AS 1858.2 (EM4); JIS Z3351 (YS-NCM4)
S2005-NCM5	0.12	0.7	0.2	3.5	1.5	0.5		JIS Z3351 (YS-NCM5)

AWS A5.22 (Continued)
Stainless Steel
Flux Cored Wires

WFM No.	Grade
TS430-0x	E430Tx-x

AWS A5.23
Low Alloy Steel
Wires for Submerged Arc

S1000-A1	EA1
S2000-A2	EA2
S3000-A3	EA4
S4000-A3	EA3
S4020-A3	EA3K
S1100-B05	EB1
S1210-B05	EB5
S1000-B2	EB2
S1001-B2	EB2RR
S1200-B2	EB2H
S1000-B3	EB3
S1001-B3	EB3RR
S1000-B6	EB6
S2200-B6	EB6H
S2000-B8	EB8
S2001-B9	EB9
S2000-N1	ENi1
S2010-N1	ENi1K
S2000-N2	ENi2
S2000-N3	ENi3
S2002-NCM	EF4
S3005-NCM2	EF6
S3115-NCM2	EM3
S4005-NCM3	EF5
S4105-NCM4	EM4
S4005-NM	EF2
S2002-NM1	ENi5
S2005-NM1	EF1
S4005-NM1	EF3
S2002-NM2	ENi4
S3005-NM2	EM2
S1000-W	EW

AWS A5.28
Low Alloy Steel
Wires for GMAW and GTAW

WFM No.	Grade
S2130-0	ER70S-A1
S1130-B2	ER70S-B2
S1030-B2L	ER70S-B2L
S1030-B3L	ER80S-B3L
S1130-B3	ER90S-B3
S1120-B6	ER80S-B6
S1130-B8	ER80S-B8
S2101-B9	ER90S-B9
S3130-0	ER80S-D2
S4130-0	ER90S-D2
S2120-N1	ER80S-Ni1
S2130-N2	ER80S-Ni2
S2130-N3	ER80S-Ni3
S3021-NCM1.5	ER100S-1
S3011-NCM2	ER110S-1
S3121-NCM2.5	ER120S-1

AWS A5.29
Low Alloy Steel
Flux Cored Wires

Tx483xx-A1	E7xT5-A1
Tx55Nxx-A1	E8xT1-A1
Tx55Nxx-B1	E8xTy-B1
Tx55Nxx-B2	E8xTy-B2
Tx55Nxx-B2L	E8xTy-B2L
Tx55Nxx-B2H	E8xTy-B2H
Tx62Nxx-B3	E9xTy-B3
Tx69Nxx-B3	E10xTy-B3
Tx62Nxx-B3L	E9xTy-B3L
Tx62Nxx-B3H	E9xTy-B3H
Tx55Nxx-B6	E8XT5-B6
Tx55Nxx-B6L	E8XT5-B6L
Tx55Nxx-B8	E8XT5-B8
Tx55Nxx-B8L	E8XT5-B8L
Tx624xx-D1	E9xT1-D1
Tx625xx-D2	E9xT5-D2
Tx694xx-D2	E10xT5-D2
Tx623xx-D3	E9xT1-D3
Tx433xx-Ni1	E6xT1-Ni1
Tx483xx-Ni1	E7xTy-Ni1

AWS A5.29 (Continued)
Low Alloy Steel
Flux Cored Wires

WFM No.	Grade
Tx553xx-Ni1	E8xT5-Ni1
Tx484xx-Ni2	E7xTy-Ni2
Tx554xx-Ni2	E8xTy-Ni2
Tx624xx-Ni2	E9xT1-Ni2
Tx552xx-Ni3	E8xT11-Ni3
Tx557xx-Ni3	E8xT5-Ni3
Tx627xx-Ni3	E9xT5-Ni3
Tx554xx-K1	E8xT5-K1
Tx482xx-K2	E7xTy-K2
Tx553xx-K2	E8xTy-K2
Tx625xx-K2	E9xTy-K2
Tx692xx-K3	E10xT1-K3
Tx695xx-K3	E10xT5-K3
Tx762xx-K3	E11xT1-K3
Tx765xx-K3	E11xT5-K3
Tx762xx-K4	E11xT1-K4
Tx765xx-K4	E11xT5-K4
Tx835xx-K4	E12xTy-K4
Tx83Nxx-K5	E12xTy-K5
Tx433xx-K6	E7xT8-K6
Tx486xx-K6	E7xT5-K6
Tx483xx-K6	E7xT8-K6
Tx695xx-K7	E10xT1-K7
Tx623xx-K8	E9xT8-K8
Tx62Dxx-K9	E9xT1-K9
Tx69Dxx-K9	E10xT1-K9
Tx553xx-W2	T8xT1-W2

USA Specifications (SAE-AMS)

WFM No.	Grade
SNi6062	5679
SS347-0	5680
SS316-0	5692
SS310-0	5694
SS316-3	5696
SS410-0	5776
SS349-0	5782
SNi1004	5786
SS347-3	5790
SS630-0	5803
SNi7718	5832
SNi6082	5836
SNi6625	5837
SNi6231	5839

Japan Specifications

JIS Z3211
Carbon Steel
Covered Electrodes

WFM No.	Grade
E4301	D4301
E4303	D4303
E4311	D4311
E4313	D4313
E4316	D4316
E4324	D4324
E4326	D4326
E4327	D4327
E4340	D4340

JIS Z3212
Carbon Steel
Covered Electrodes

E4800	D5000
E4801	D5001
E4803	D5003
E4816	D5016
E4826	D5026

JIS Z3212
Low Alloy Steel
Covered Electrodes

E5715	D5816
E5726	D5826
E6116	D6216
E6126	D6226
E6916	D7016
E7516	D7626
E7800	D8000
E7816	D8016

JIS Z3214
Low Alloy Steel
Covered Electrodes

E48xx-W1	DA50xxG
E55xx-W1	DA58xxG
E48xx-W2	DA50xxW
E55xx-W2	DA58xxW

JIS Z3214 (Continued)
Low Alloy Steel
Covered Electrodes

WFM No.	Grade
E48xx-W3	DA50xxP
E55xx-W3	DA58xxP

JIS Z3221
Stainless Steel
Covered Electrodes

ES168-2x	D16-8-2
ES307-2x	D307
ES308-0x	D308
ES308-3x	D308L
ES309-0x	D309
ES309-2x	D309Mo
ES309-3x	D309L
ES309-6x	D309MoL
ES309-73x	D309NbL
ES309-7x	D309Nb
ES310-0x	D310
ES310-2x	D310Mo
ES312-0x	D312
ES316-0x	D316
ES316-3x	D316L
ES316-9x	D316J1L
ES317-0x	D317
ES317-3x	D317L
ES318-0x	D318
ES329-0x	D329J1
ES347-0x	D347
ES347-3x	D347L
ES349-0x	D349
ES410-0x	D410
ES410-7x	D410Nb
ES430-0x	D430
ES430-7x	D430Nb
ES630-0x	D630

JIS Z3223
Low Alloy Steel
Covered Electrodes

WFM No.	Grade
E48xx-A1	DT1216
E55xx-B2	DT2313
E55xx-B2L	DT23xx
E62xx-B3	DT2413
E55xx-B3L	DT24xx
E55xx-B6	DT2516
E55xx-B8	DT2616

JIS Z3224
Nickel Alloy
Covered Electrodes

EN2061	DNi-1
EN4060	DNiCu-7
EN4061	DNiCu-1
EN4064	DNiCu-4
EN6002	DNiCrMo-2
EN6062	DNiCrFe-1
EN6082	DNiCrFe-3
EN6092	DNiCrFe-2
EN6275	DNiCrMo-5
EN6276	DNiCrMo-4
EN6625	DNiCrMo-3
EN1001	DNiMo-1

JIS Z3225
Nickel Alloy
Covered Electrodes

EN6604	D9Ni-1
EN1019	D9Ni-2

JIS Z3232
Aluminum Alloy
Solid Wires

SA1188	A1070
SA1100	A1100
SA1200	A1200
SA2319	A2319
SA4043	A4043
SA4047	A4047

JIS Z3232 (Continued)
Aluminum Alloy
Solid Wires

WFM No.	Grade
SA5183	A5183
SA5356	A5356
SA5554	A5554
SA5654	A5654

JIS Z3241
Low Alloy Steel
Covered Electrodes

E55xx-C1	DL5016-yy2
E48xx-C2	DL5016-yy3
E55xx-C4	DL5016-yy1
E48xx-C6	DL5016-yy0
E48xx-C7	DL5016-yy4

JIS Z3312
Carbon Steel Solid
Wires for GMAW and GTAW

S3140	YGW12
S3131	YGW11
S3132	YGW13
S3131	YGW15
S3130	YGW16

JIS Z3312
Low Alloy Steel
Wires for GMAW and GTAW

S4141-0	YGW21
S3111-NCM1	YGW23

JIS Z3313
Carbon Steel
Flux Cored Electrodes

TD430xx	YFW-C430x
TG430xx	YFW-A430x
TH430xx	YFW-S430x
TD480xx	YFW-C500X
TD48Dxx	YFW-C50Dx
TD482xx	YFW-C502X
TG480xx	YFW-A500x
TG48Dxx	YFW-A50Dx

JIS Z3313 (Continued)
Carbon Steel
Flux Cored Electrodes

WFM No.	Grade
TG482xx	YFW-A502x
TH480xx	YFW-S500x
TH48Dxx	YFW-S50Dx
TH482xx	YFW-S502x
TD590xx	YFW-C60Ex
TG590xx	YFW-A60Ex

JIS Z3313
Low Alloy Steel
Flux Cored Wires

Tx483xx-Ni1	YFL-x503x
Tx484xx-Ni2	YFL-x504x
Tx486xx-Ni2	YFL-x506x
Tx553-Ni1	YFW-x60xx

JIS Z3315
Low Alloy Steel
Wires for GMAW and GTAW

S2131-W2	YGA-5xW
S2132-W3	YGA-5xP

JIS Z3316
Carbon Steel
Solid Wires for GMAW and GTAW

S2031	YGT50

JIS Z3316
Low Alloy Steel
Wires for GMAW and GTAW

S2130-0	YGT M
S2030-0	YGT ML
S1130-B2	YGT 1CM
S1030-B2L	YGT 1CML
S1030-B3L	YGT 2CML
S1130-B3	YGT 2CM
S1030-B3.5	YGT 3CM
S1130-B6	YGT 5CM
S3021-NCM1.5	YGT-70
S4130-NCM1.5	YGT-6x
S3011-NCM2	YGT-80

JIS Z3317
Low Alloy Steel
Wires for GMAW and GTAW

WFM No.	Grade
S3130-B1	YGCM-x
S1130-B2	YG 1CM-x
S1130-B3	YG 2CM-x
S1130-B6	YG 5CM-x
S3100-0	YGM-x

JIS Z3318
Low Alloy Steel
Flux Cored Wires

Tx480xx-A1	YFM-x
Tx550xx-B1	YFCM-x
Tx550xx-B2	YF1CM-x
Tx620xx-B3	YF2CM-x

JIS Z3320
Low Alloy Steel
Flux Cored Wires

Tx48Dxx-W2	YFA-50W
Tx553xx-W2	YFA-58W
Tx480xx-W3	YFA-50P
Tx550xx-W3	YFA-58P

JIS Z3321
Stainless Steel
Solid Wires for GMAW and GTAW

SS168-2	Y16-8-2
SS308-0	Y308
SS308-1	Y308Si
SS308-3	Y308L
SS308-8	Y308LSi
SS309-0	Y309
SS309-1	Y309Si
SS309-2	Y309Mo
SS309-3	Y309L
SS310-0	Y310
SS310-3	Y310S
SS312-0	Y312
SS316-0	Y316
SS316-1	Y316Si
SS316-3	Y316L

Chapter 31

GLOSSARY OF WELDING TERMS

The terms and definitions listed in this glossary are consistent with the International Institute of Welding (IIW) terms and essentially agree with the American Welding Society (AWS) definitions and terms.

The first term listed in each group starting on the next page is English (**bold type**), the second term is French (***bold, italic type***) and the third term is Spanish (***bold, italic and underlined type***). Definitions for the English and French terms are provided where possible, however, Spanish term definitions are not provided at this time. The terms/definitions in the following list are arranged in alphabetical order by the English term.

These terms are also listed in Spanish and French alphabetical order following the term/definition section (see pages 364 and 376, respectively).

Translation of technical terms into various languages is an extremely difficult and complex undertaking and while this information was compiled with great effort and review, the publishers do not warrant its suitability and assume no liability or responsibility of any kind in connection with this information. We encourage all readers to inform *CASTI* Publishing Inc. of technical or language inaccuracies, and/or to offer suggestions for improving this glossary of terms. Your co-operation and assistance in this matter are greatly appreciated.

A

actual throat thickness in a butt weld. The perpendicular distance between two lines, each parallel to a line joining the outer toes, one being a tangent at the weld face and the other being through the furthermost point of fusion penetration.
épaisseur totale de la soudure (dans une soudure bout à bout). Distance comprise entre deux droites parallèles au plan joignant les lignes de raccordement, l'une de ces droites étant tangente à la surface du cordon et l'autre au point extrême de la pénétration à la racine.
espesor total de la soldadura (en una unión a tope)

actual throat thickness of a fillet weld. The perpendicular distance between two lines, each parallel to a line joining the outer toes, one being a tangent at the weld face and the other being through the furthermost point of fusion penetration.
épaisseur totale de la soudure (dans une soudure d'angle). Distance comprise entre deux droites parallèles au plan joignant les lignes de raccordement, l'une de ces droites étant tangente à la surface du cordon et l'autre au point extrême de la pénétration à la racine.
espesor total de soldadura (en una unión de ángulo)

age hardening. Hardening by aging, usually by rapid cooling or cold working.
endurcissement par vieillissement. Accroissement de dureté apparaissant après refroidissement rapide (vieillissement après trempe) ou après déformation (vieillissement après écrouissage).
endurecimiento por envejecimiento

age hardening crack. A crack due to hardening by aging, usually after rapid cooling or cold working.
fissure due au vieillissement. Fissure due à un durcissement par vieillissement, généralement après refroidissement rapide ou écrouissage.
grieta debida al envejecimiento

aging. A change in properties of a metal or alloy that generally occurs slowly at room temperature but more rapidly at higher temperatures.
vieillissement. Modification des propriétés d'un métal ou d'un alliage. Le phénomène, généralement lent à température ambiante, s'accélère lorsque la température croît.
envejecimiento

electro-slag welding. Fusion welding using the combined effects of current and electrical resistance in a consumable electrode or electrodes, and a conducting bath of molten slag through which the electrode passes into the molten pool; both the pool and the slag bath being retained in the joint by cooled shoes which move progressively upwards. After the initial arcing period, the end of the electrode is covered by the rising slag; melting then continues until the joint is completed. Electrodes may be bare or cored wire(s) or strip(s) or plate(s).
soudage vertical sous laitier; soudage sous laitier; soudage électroslag; soudage sous laitier électroconducteur. Soudage par fusion utilisant les effets combinés du courant et de la résistance électrique dans une (ou plusieurs) électrode fusible, ainsi qu'un bain de laitier électroconducteur fondu à travers lequel l'électrode pénètre dans le bain de fusion; ce dernier, ainsi que le laitier sont retenus dans le joint par des patins refroidis se déplaçant progressivement de bas en haut. Après la période initiale d'amorçage de l'arc, l'extrémité de l'électrode est recouverte par le laitier montant et la fusion continue jusqu'à l'achèvement de la soudure. Les électrodes peuvent être des fils nus ou fourrés, des feuillards ou des plaques.
soldeo por electroescoria

embrittlement. Reduction in the normal ductility of a metal due to a physical or chemical change.
fragilisation. Abaissement de la ductilité d'un métal sous l'effet d'un changement physique ou chimique.
fragilización

excess weld metal in a butt weld; reinforcement. Weld metal lying outside the plane joining the toes.
surépaisseur (d'une soudure bout à bout). Métal fondu situé au-delà du plan joignant les lignes de raccordement.
sobreespesor (en una unión a tope)

excess weld metal in a fillet weld; reinforcement. Weld metal lying outside the plane joining the toes.
surépaisseur (d'une soudure d'angle); convexité. Métal fondu situé au-delà du plan joignant les lignes de raccordement.
sobreespesor (en una unión de ángulo); convexidad

excessive reinforcement; excess weld metal. An excess of weld metal at the face(s) of the weld.
surépaisseur excessive. Excès d'épaisseur du métal déposé.
sobreespesor excesivo

SPANISH	ENGLISH	FRENCH
abertura de la unión	groove	joint
acuerdo; acuerdo del cordón de soldadura	toe of weld	raccordement; raccordement du cordon de soudure; ligne de raccordement
anchura de la soldadura	weld width of a butt weld	largeur de la soudure
anillo soporte	backing ring	bague support; anneau support
baño de fusión	weld pool	bain de fusion
bruto de soldeo	as welded	brut de soudage
cabina de soldeo	welding booth	cabine de soudage
cara a soldar; borde	groove face	face à souder; bord à souder
cara fusible	fusion face.	face à souder par fusion
casco de soldador	welder's helmet	casque de soudeur
cavidad	cavity; void	cavité
cementación	carburisation	cémentation
certificado de cualificación del soldador	welder certification; welder certificate	certificat de qualification de soudeur; licence de soudeur; carte de soudeur
chapa apéndice de ensayo	coupon plate	appendice témoin; coupon d'essai
chispa de soldeo	welding spark	étincelle de soudage
cobresoldeo	braze welding	soudobrasage
conjunto soldado; construcción soldada	weldment	ensemble soudé; construction soudée
consumibles	welding consumables	produits consommables
cordón de metal depositado	bead on plate	cordon déposé; chenille
cordón de penetración	penetration bead	cordon de pénétration
cordón de soldadura	weld bead	cordon de soudure
cordón soporte de raíz	backing weld; support run; backing run	cordon support envers
corrosión debida al soldeo	corrosion due to welding; weld decay	corrosion due au soudage
corte de arco (sobre la pieza)	arc strike; stray flash	coup d'arc (sur la pièce)
cráter	crater	cratère
cualificación de soldadores y del procedimiento operatorio	welding procedure qualification	qualification des soudeurs et du mode opératoire

Appendix

1

HARDNESS CONVERSION NUMBERS FOR STEELS

APPROXIMATE HARDNESS CONVERSION NUMBERS FOR NONAUSTENITIC STEELS[a, b]

Rockwell C 150 kgf Diamond HRC	Vickers HV	Brinell 3000 kgf 10mm ball HB	Knoop 500 gf HK	Rockwell A 60 kgf Diamond HRA	Rockwell Superficial Hardness			Approximate Tensile Strength ksi (MPa)
					15 kgf Diamond HR15N	30 kgf Diamond HR30N	45 kgf Diamond HR45N	
68	940	---	920	85.6	93.2	84.4	75.4	---
67	900	---	895	85.0	92.9	83.6	74.2	---
66	865	---	870	84.5	92.5	82.8	73.3	---
65	832	739[d]	846	83.9	92.2	81.9	72.0	---
64	800	722[d]	822	83.4	91.8	81.1	71.0	---
63	772	706[d]	799	82.8	91.4	80.1	69.9	---
62	746	688[d]	776	82.3	91.1	79.3	68.8	---
61	720	670[d]	754	81.8	90.7	78.4	67.7	---
60	697	654[d]	732	81.2	90.2	77.5	66.6	---
59	674	634[d]	710	80.7	89.8	76.6	65.5	351 (2420)
58	653	615	690	80.1	89.3	75.7	64.3	338 (2330)
57	633	595	670	79.6	88.9	74.8	63.2	325 (2240)
56	613	577	650	79.0	88.3	73.9	62.0	313 (2160)
55	595	560	630	78.5	87.9	73.0	60.9	301 (2070)
54	577	543	612	78.0	87.4	72.0	59.8	292 (2010)
53	560	525	594	77.4	86.9	71.2	58.6	283 (1950)
52	544	512	576	76.8	86.4	70.2	57.4	273 (1880)
51	528	496	558	76.3	85.9	69.4	56.1	264 (1820)
50	513	482	542	75.9	85.5	68.5	55.0	255 (1760)
49	498	468	526	75.2	85.0	67.6	53.8	246 (1700)
48	484	455	510	74.7	84.5	66.7	52.5	238 (1640)
47	471	442	495	74.1	83.9	65.8	51.4	229 (1580)

Appendix

2

UNIT CONVERSIONS

METRIC CONVERSION FACTORS					
To Convert From	**To**	**Multiply By**	**To Convert From**	**To**	**Multiply By**
Angle			**Mass per unit time**		
degree	rad	1.745 329 E -02	lb/h	kg/s	1.259 979 E - 04
Area			lb/min	kg/s	7.559 873 E - 03
$in.^2$	mm^2	6.451 600 E + 02	lb/s	kg/s	4.535 924 E - 01
$in.^2$	cm^2	6.451 600 E + 00	**Mass per unit volume (includes density)**		
$in.^2$	m^2	6.451 600 E - 04	g/cm^3	kg/m^3	1.000 000 E + 03
ft^2	m^2	9.290 304 E - 02	lb/ft^3	g/cm^3	1.601 846 E - 02
Bending moment or torque			lb/ft^3	kg/m^3	1.601 846 E + 01
lbf - in.	N - m	1.129 848 E - 01	$lb/in.^3$	g/cm^3	2.767 990 E + 01
lbf - ft	N - m	1.355 818 E + 00	$lb/in.^3$	kg/m^3	2.767 990 E + 04
kgf - m	N - m	9.806 650 E + 00	**Power**		
ozf - in.	N-m	7.061 552 E - 03	Btu/s	kW	1.055 056 E + 00
Bending moment or torque per unit length			Btu/min	kW	1.758 426 E - 02
lbf - in./in.	N - m/m	4.448 222 E + 00	Btu/h	W	2.928 751 E - 01
lbf - ft/in.	N - m/m	5.337 866 E + 01	erg/s	W	1.000 000 E - 07
Corrosion rate			ft - lbf/s	W	1.355 818 E + 00
mils/yr	mm/yr	2.540 000 E - 02	ft - lbf/min	W	2.259 697 E - 02
mils/yr	µ/yr	2.540 000 E + 01	ft - lbf/h	W	3.766 161 E - 04
Current density			hp (550 ft - lbf/s)	kW	7.456 999 E - 01
$A/in.^2$	A/cm^2	1.550 003 E - 01	hp (electric)	kW	7.460 000 E - 01
$A/in.^2$	A/mm^2	1.550 003 E - 03	**Power density**		
A/ft^2	A/m^2	1.076 400 E + 01	$W/in.^2$	W/m^2	1.550 003 E + 03
Electricity and magnetism			**Pressure (fluid)**		
gauss	T	1.000 000 E - 04	atm (standard)	Pa	1.013 250 E + 05
maxwell	µWb	1.000 000 E - 02	bar	Pa	1.000 000 E + 05

METRIC CONVERSION FACTORS (Continued)					
To Convert From	**To**	**Multiply By**	**To Convert From**	**To**	**Multiply By**
Electricity and magnetism (Continued)			**Pressure (fluid) (Continued)**		
mho	S	1.000 000 E + 00	in. Hg (32 F)	Pa	3.386 380 E + 03
Oersted	A/m	7.957 700 E + 01	in. Hg (60 F)	Pa	3.376 850 E + 03
Ω - cm	Ω - m	1.000 000 E - 02	lbf/in.^{2} (psi)	Pa	6.894 757 E + 03
Ω circular - mil/ft	μΩ - m	1.662 426 E - 03	torr (mm Hg, 0 C)	Pa	1.333 220 E + 02
Energy (impact other)			**Specific heat**		
ft•lbf	J	1.355 818 E + 00	Btu/lb - F	J/kg - K	4.186 800 E + 03
Btu (thermochemical)	J	1.054 350 E + 03	cal/g - C	J/kg - K	4.186 800 E + 03
cal (thermochemical)	J	4.184 000 E + 00	**Stress (force per unit area)**		
kW - h	J	3.600 000 E + 06	tonf/in.^{2} (tsi)	MPa	1.378 951 E + 01
W - h	J	3.600 000 E + 03	kgf/mm^2	MPa	9.806 650 E + 00
Flow rate			ksi	MPa	6.894 757 E + 00
ft^3/h	L/min	4.719 475 E - 01	lbf/in.^{2} (psi)	MPa	6.894 757 E - 03
ft^3/min	L/min	2.831 000 E + 01	N/mm^2	Pa	1.000 000 E + 00
gal/h	L/min	6.309 020 E - 02	**Temperature**		
gal/min	L/min	3.785 412 E + 00	F	C	5/9 (F - 32)
Force			R	K	5/9
lbf	N	4.448 222 E + 00	**Temperature interval**		
kip (1000 lbf)	N	4.448 222 E + 03	F	C	5/9
tonf	kN	8.896 443 E + 00	**Thermal conductivity**		
kgf	N	9.806 650 E + 00	Btu - in./s - ft^2 - F	W/m - K	5.192 204 E + 02
Force per unit length			Btu/ft - h - F	W/m - K	1.730 735 E + 00
lbf/ft	N/m	1.459 390 E + 01	Btu - in./h . ft^2 - F	W/m - K	1.442 279 E - 01
lbf/in.	N/m	1.751 268 E + 02	cal/cm - s - C	W/m - K	4.184 000 E + 02

Appendix

3

PIPE DIMENSIONS

DIMENSIONS OF WELDED AND SEAMLESS PIPE[a]

Nominal Pipe Size	Outside Diameter	Nominal Wall Thickness (in)							
		Schedule 60	Extra Strong	Schedule 80	Schedule 100	Schedule 120	Schedule 140	Schedule 160	XX Strong
1/8	0.405	---	0.095	0.095	---	---	---	---	---
1/4	0.540	---	0.119	0.119	---	---	---	---	---
3/8	0.675	---	0.126	0.126	---	---	---	---	---
1/2	0.840	---	0.147	0.147	---	---	---	0.188	0.294
3/4	1.050	---	0.154	0.154	---	---	---	0.219	0.308
1	1.315	---	0.179	0.179	---	---	---	0.250	0.358
1 1/4	1.660	---	0.191	0.191	---	---	---	0.250	0.382
1 1/2	1.900	---	0.200	0.200	---	---	---	0.281	0.400
2	2.375	---	0.218	0.218	---	---	---	0.344	0.436
2 1/2	2.875	---	0.276	0.276	---	---	---	0.375	0.552
3	3.5	---	0.300	0.300	---	---	---	0.438	0.600
3 1/2	4.0	---	0.318	0.318	---	---	---	---	---
4	4.5	---	0.337	0.337	---	0.438	---	0.531	0.674
5	5.563	---	0.375	0.375	---	0.500	---	0.625	0.750
6	6.625	---	0.432	0.432	---	0.562	---	0.719	0.864
8	8.625	0.406	0.500	0.500	0.594	0.719	0.812	0.906	0.875
10	10.75	0.500	0.500	0.594	0.719	0.844	1.000	1.125	1.000
12	12.75	0.562	0.500	0.688	0.844	1.000	1.125	1.312	1.000
14 O.D.	14.0	0.594	0.500	0.750	0.938	1.094	1.250	1.406	---
16 O.D.	16.0	0.656	0.500	0.844	1.031	1.219	1.438	1.594	---
18 O.D.	18.0	0.750	0.500	0.938	1.156	1.375	1.562	1.781	---
20 O.D.	20.0	0.812	0.500	1.031	1.281	1.500	1.750	1.969	---
22 O.D.	22.0	0.875	0.500	1.125	1.375	1.625	1.875	2.125	---
24 O.D.	24.0	0.969	0.500	1.218	1.531	1.812	2.062	2.344	---
26 O.D.	26.0	---	0.500	---	---	---	---	---	---

DIMENSIONS OF WELDED AND SEAMLESS PIPE (Continued)

Nominal Pipe Size	Outside Diameter	Nominal Wall Thickness (in)							
		Schedule 60	Extra Strong	Schedule 80	Schedule 100	Schedule 120	Schedule 140	Schedule 160	XX Strong
28 O.D.	28.0	---	0.500	---	---	---	---	---	---
30 O.D.	30.0	---	0.500	---	---	---	---	---	---
32 O.D.	32.0	---	0.500	---	---	---	---	---	---
34 O.D.	34.0	---	0.500	---	---	---	---	---	---
36 O.D.	36.0	---	0.500	---	---	---	---	---	---
42 O.D.	42.0	---	0.500	---	---	---	---	---	---

a. All units are inches.

Appendix

4

INTERNATIONAL STANDARDS ORGANIZATIONS, TECHNICAL ASSOCIATIONS & SOCIETIES

International Standards Organizations

AENOR	Asociación Española de Normalización y Cetificación (Spain) tel +34 1 310 48 51, fax +34 1 310 49 76 http://www.aenor.es/medioamb/
AFNOR	Association Française de Normalisation (France) tel +33 1 42 91 55 55, fax +33 1 42 91 56 56 http://www.afnor.fr
ANSI	American National Standards Institute (USA) tel +212 642 4900, fax +212 302 1286 http://web.ansi.org/default_js.htm
ASTM	American Society for Testing and Materials (215) 299-5400 http://www.astm.org/
BSI	British Standards Institution (England) tel +44 181 996 70 00, fax +44 181 996 70 01 http://www.bsi.org.uk/
CSA	Canadian Standards Association (Canada) tel +416 747 4044, fax +416 747 2475 http://www.csa.ca/
CSCE	Canadian Society for Chemical Engineers (613) 526-4652
DIN	Deutches Institut für Normung e.V. (Germany) tel +49 30 26 01 2260, fax +49 30 2601 1231 http://www.computerwoche.de/archiv/1978/39/7839c043.html
DS	Dansk Standard (Denmark) tel +45 39 77 01 01, fax +45 39 77 02 02 http://www.diku.dk/users/khan/D/dansk.-0040.html
ELOT	Hellenic Organization for Standardization (Greece) tel +30 1 201 50 25, fax +30 1 202 07 76 http://www.elot.gr/

International Standards Organizations (Continued)

IBN/BIN	Institut Belge de Normalisation/Belgisch Instituut voor Normalisatie (Belgium) tel +32 2 738 01 11, fax +32 2 733 42 64
IPQ	Instituto Português da Qualidade (Potugal) tel +351 1 294 81 00, fax +351 1 294 81 01 http://www.ipq.pt/homepage.html
ISO	International Organization for Standardization (Switzerland) tel +41 22 749 01 11, fax +41 22 733 34 30 http://www.iso.ch/
ITM	Inspection du Travail et des Mines (Luxembourg) tel +352 478 61 54, fax +352 49 14 47
JSA	Japanese Standards Association (Japan) tel +03 3583 8074, fax + 033582 2390
NNI	Nederlands NormalisatieiInstituut (Netherlands) tel +31 15 69 03 90, fax +31 15 69 01 90
NSAI	National Standards Authority of Ireland tel +353 1 837 01 01, fax +353 1 836 98 21 http://www.nsai.ie/
NFS	Norges Standardiseringsforbund (Norway) tel +47 22 46 60 94, fax +47 22 46 44 57 http://www.standard.no/nsf/
ON	Österreichisches Normungsindtitut (Austria) tel +43 1 213 00, fax +43 1 213 00 650
SA	Standards Australia tel +08 373 1540, fax +08 373 1051 http://www.standards.com.au/~sicsaa/
SCC	Standards Council of Canada tel +800 267 8220, fax +613 995 4564 http://www.scc.ca/about/index.html
SIS	Standardiseringskommissione n i Sverige (Sweden) tel +46 8 613 52 00, fax +46 8 411 70 35
SFS	Suomen Standardisoimisliitto r.y. (Findland) tel +358 0 149 93 31, fax +358 0 146 49 25 http://www.ficc.fi/sfs.htm
SNV	Schweizerische Normen-Vereinigung (Switzerland) tel +41 1 254 54 54, fax +41 1 254 54 74 http://www.snv.ch/
STRI	Technological Institute of Iceland tel +354 587 70 02, fax +354 587 74 09 http://iti.is/orgchart.html
UNI	Ente Nazionale Italiano di Unificazione (Italy) tel +39 2 70 02 41, fax +39 2 70 10 61 06

Technical Associations & Societies

AA	The Aluminum Association (202) 862-5100 http://www.aluminum.org/
AEE	The Association of Energy Engineers (404) 447-5083
AFS	American Foundrymen's Society (312) 824-0181 http://www.afsinc.org/
AISI	Association of Iron and Steel Engineers (412) 281-6323 http://www.aise.org/magazine/isead.htm
AlChE	American Institute of Chemical Engineers (212) 705-7338 http://www.aiche.org/, e-mail xpress@aiche.org
AMEC	Advanced Materials Engineering Centre (902) 425-4500
ASEE	American Society for Engineering Education (202) 331-3500 http://www.asee.org/
ASM	ASM International - The Materials Information Society (800) 336-5152 or (216) 338-5151 http://www.asm-intl.org/
ASME	American Society of Mechanical Engineers (212) 705-7722 http://www.asme.org/
ASNT	American Society for Nondestructive Testing (614) 274-6003 http://www.utexas.edu/ftp/depts/dos/cci/orgs/01771.html
ASQC	American Society for Quality Control (414) 272-8575 http://www.asqc.org/
ASTM	American Society for Testing and Materials (215) 299-5400 http://www.astm.org/
AWS	American Welding Society (305) 443-9353 or (800) 443-9353 http://www.aws.org/
CAIMF	Canadian Advanced Industrial Materials Forum (416) 798-8055
CASI	Canadian Aeronautic & Space Institute (613) 234-0191
CCA	Canadian Construction Association (613) 236-9455 http://www.cca-acc.com/
CCPE	Canadian Council of Professional Engineers (613) 232-2474 http://www.ccpe.ca/
CCS	Canadian Ceramics Society (416) 491-2886
CDA	Copper Development Association (212) 251-7200 http://www.copper.org/
CEN	European Committee for Standardization +32 2 550 08 11
CIE	Canadian Institute of Energy (403) 262-6969
CIM	Canadian Institute for Mining and Metallurgy (514) 939-2710 http://www.cim.org/
CMA	Canadian Manufacturing Association (416) 363-7261
CNS	Canadian Nuclear Society (416) 977-6152 http://www.cns-snc.ca/

Technical Associations & Societies (Continued)

CPI	Canadian Plastics Institute (416) 441-3222
CPIC	Canadian Professional Information Centre (905) 624-1058
CSEE	Canadian Society of Electronic Engineers (514) 651-6710
CSME	Canadian Society of Mechanical Engineers (514) 842-8121 http://www.freenet.edmonton.ab.ca/csme
CSNDT	Canadian Society for Nondestructive Testing (416) 676-0785 http://www.csndt.org/
El	Engineering Information Inc. (212) 705-7600 http://www.ei.org/
FED	Federal & Military Standards (215) 697-2000
IEEE	lnstitute of Electrical & Electronic Engineers (212) 705-7900 http:// www.ieee.org
IES	Institute of Environmental Sciences (312) 255-1561 http://www.ei.org, e-mail ei@ei.org
IIE	Institute of Industrial Engineers (404) 449-0460 http://www.iienet.org/
IMMS	International Material Management Society (705) 525-4667
ISA	Instrument Society of America (919) 549-8411 http://www.isa.org/
ISS	Iron and Steel Society (412) 776-1535 http://www.issource.org/
ITA	Internartional Titanium Association (303) 443-7515 http://www.titanium.org/
ITI	Information Technology Institute (412) 795-5300 http://www.iti.ca
ITRI	International Tin Research Institute (614) 424-6200
MSS	Manufactures Standardization Society of Valves & Fittings Industry (703) 281-6613
MTS	Marine Technology Society (202) 775-5966 http://www.cms.udel.edu/mts/
NACE	National Association of Corrosion Engineers (713) 492-0535 http://www.nace.org/
NAPE	National Association of Power Engineers (212) 298-0600 http://www.powerengineers.com/
NAPEGG	Association of Professional Engineers, Geologists and Geophysicists of the Northwest Territories (403) 920-4055 http://www.napegg.nt.ca/
NiDI	Nickel Development Institute (416) 591-7999
PIA	Plastics Institute of America (201) 420-5553
RIA	Robotic Industries Association (313) 994-6088 http://www.robotics.org/
SAE	Society of Automotive Engineers (412) 776-4841 http://www.sae.org/

Technical Associations & Societies (Continued)

SAME	Society of American Military Engineers (703) 549-3800 http://www.mines.colorado.edu/All_about/events/orgs/prof/same.htm
SAMPE	Society for the Advancement of Materials and Processing Engineering (818) 331-0616 http://www.sampe.org
SCC	Standards Council of Canada (800) 267-8220 http:// www.scc.ca, e-mail info@sae.org
SCTE	Society of Carbide & Tool Engineers (216) 338 5151
SDCE	Society of Die Casting Engineers (312) 452-0700
SME	Society of Manufacturing Engineers (313) 271-1500 http://www.sme.org, e-mail krommar@sme.org
SPE	Society of Petroleum Engineers (214) 669-3377 http://www.spe.org/
SSIUS	Specialty Steel Industry of the United States (202) 342-8630
SSPC	Steel Structures Painting Council (412) 268-3327 http://www.horizonweb.com/pcn/90.htm
STC	Society for Technical Communications (202) 737-0035 http://www.stc-va.org/
STLE	Society of Tribologists and Lubrication Engineers (312) 825-5536
TMS	The Minerals, Metals, and Materials Society (412) 776-9000

For more web site addresses of other engineering related sites, visit our Other Sites page at www.casti.ca.

INDEX

A

alloy steel, 69
Cr-Mo steels, 71
preheat and postheat conditions, 72
heat affected zone, 75
HSLA, 76
hot cracking susceptibility, 71
hydrogen assisted cracking, 69, 70, 75
nickel steels (cryogenic), 73
reheat cracking, 73
temper embrittlement, 72
alloy steel filler metals
AWS A5.5 (SMAW), 160
AWS A5.23 (SAW), 190
AWS A5.28 (GMAW, GTAW, PAW), 212
AWS A5.29 (FCAW), 218
(for European alloy steel filler metal data, EN standards, *see also* carbon steel filler metals)
international cross references, 408-423, 433-437, 444-457, 466-470
aluminum, 117
weldability, 118
aluminum filler metals
AWS A5.3 (SMAW), 250-251
AWS A5.10 (GMAW, GTAW, OFW, PAW), 252-258
international cross references, 437, 470

American filler metal data
AWS A5.1, 148-157
AWS A5.2, 158-159
AWS A5.3, 250-251
AWS A5.4, 230-235
AWS A5.5, 160-174
AWS A5.6, 260-263
AWS A5.7, 264-266
AWS A5.8, 314-326
AWS A5.9, 236-241
AWS A5.10, 252-258
AWS A5.11, 274-277
AWS A5.12, 288-290
AWS A5.13, 294-302

American filler metal data (continued)
AWS A5.14, 278-281
AWS A5.15, 142-145
AWS A5.16, 284-286
AWS A5.17, 175-179
AWS A5.18, 180-185
AWS A5.19, 268-272
AWS A5.20, 186-189
AWS A5.21, 303-304
AWS A5.22, 242-248
AWS A5.23, 190-200
AWS A5.24, 292
AWS A5.25, 201-205
AWS A5.26, 206-211
AWS A5.28, 212-217
AWS A5.29, 218-228
AWS A5.30, 306-312
AWS A5.31, 327-329
AWS A5.32/A5.32M, 332-334

B

brazing and braze welding filler metals and fluxes
AWS A5.8 (filler metals), 314-326
AWS A5.31 (fluxes), 327-329

C

carbon equivalent
(*see also* cast iron)
general formula, 45, 64-65
IIW formula, 58
carbon steel, 51
weld metal, 59
carbon steel filler metals
AWS A5.1 (SMAW), 148-157
AWS A5.2 (OFW), 158-159
AWS A5.17 (SAW), 175-179
AWS A5.18 (GMAW, GTAW, PAW), 180-185
AWS A5.20 (FCAW), 186-189
AWS A5.25 (ESW), 201-205
AWS A5.26 (EGW), 206-211
EN 440, 346-348
EN 499, 349-352
EN 756, 353-357

carbon steel filler metals (continued)
EN 757, 358-362
prEN 758, 363-367
prEN 1599, 368-371
prEN 12070, 372-374
prEN 12071, 375-378
prEN 12535, 379-383
international cross references, 402-407, 438-443
cast iron, 95
carbon equivalent, 96
graphite, 95
machinability, 98
welding, 100
bronze welding, 102
crack repair, 100
filler metals, 101
heat affected zone, 101
preheat, 100
postweld heat treat, 100
cast iron filler metals
AWS A5.15 (FCAW, GMAW, OFW, SMAW), 142
chemical reaction
(*see* welding)
copper alloys, 121
brass, 122
bronze, 122
copper filler metals
AWS A5.6 (SMAW), 260-263
AWS A5.7 (GMAW, GTAW, PAW), 264-266
cracking in welds, 36
(see also microalloyed steels)
cold cracking, 41
ductility dip cracking, 40
hardness control, 43
hot cracking, 36, 61, 62, 69, 71
hydrogen assisted cracks, 55
lamellar tearing, 47
location, joint design, 54
liquation cracking, 39
mixed-mode cracking, 47
prevention, structural steels, 53
reheat cracking, 40, 72
solidification cracking, 37

D

defect
(*see* flaws & defects)

E

European filler metal data
EN 440, 346-348
EN 499, 349-352
EN 756, 353-357
EN 757, 358-362
prEN 758, 363-367
prEN 1599, 368-371
prEN 12070, 372-374
prEN 12071, 375-378
prEN 12535, 379-383
prEN 1600, 386-391
prEN 12072, 392-396
prEN 12073, 397-400

F

flaws & defects, 33-35
cracks, 36
defect, 34
discontinuity, 33
excess penetration, 35
flaw, 34
hot cracking, 36
imperfection, 33
lack of fusion, 35
lack of penetration, 35
porosity, 35
residual stress, 35
undercut, 35

G

gas-metal reactions
high gas solubility, 9
low gas solubility, 10

H

heat affected zone
(see also alloy steels; cast iron; stainless steels; welding thermal cycle)
carbon steel, 51
metallurgical designations, 30
microalloyed steels, 62
heat input, 17
cooling rate, 19
heating rate, 18
peak temperature, 18
thermal cycle in weld zone, 17

I

international filler metal cross references
aluminum alloy solid wire, 437, 470
carbon steel covered electrode, 402-404, 438-439
carbon steel flux cored wires, 440-441
carbon steel solid wires for gas metal arc and gas tungsten arc, 407, 443
carbon steel solid wires for submerged arc, 406, 442
carbon steel flux cored electrodes data, 404-405
low alloy steel covered electrode, 408-413, 444-447
low alloy steel flux cored wire, 414-417, 448-451
low alloy steel wire for submerged arc data, 417-420, 451-455
low alloy steel wires for gas metal arc and gas tungsten arc, 421-423, 455-457
nickel alloy bare solid wire data, 435-436, 468-469
nickel alloy covered electrodes data, 433-434, 466-467
stainless steel covered electrodes, 423-427, 457-460
stainless steel solid wires for gas metal arc and gas tungsten arc, 429-433, 463-466
stainless steel electrodes flux cored wires, 427-428, 461-462

international filler metal specifications (designations and titles)
American (AWS), 332-333
British (BS), 334
Canadian (CSA), 333
European (CEN), 339
German (DIN), 335-336
international organization for standardization (ISO), 340
Japanese (JIS), 336-338

M

magnesium, 120
magnesium filler metals
    AWS A5.19 (GMAW, GTAW, OFW, PAW), 268-272
microalloyed steels, 62
    (*see also* heat affected zone)
    microstructure, 66
    weld crack susceptibility, 67
    weld metal, 66

N

nickel alloys, 103
nickel filler metals
    AWS A5.11 (SMAW), 274-277
    AWS A5.14 (GMAW, GTAW, PAW, SAW), 278-281
international filler metal cross references
nickel alloy bare solid wire, 435-436, 468-469
nickel alloy covered electrodes, 433-434, 466-467

P

precipitation hardening
(*see* strengthening mechanisms)
platinum, 123

R

reactive alloys, 109
(*see also* titanium)
refractory alloys, 114

S

silver, 123
slag metal reaction, 11
    metal to slag transfer, 15
    slag to metal transfer, 14
stainless steel, 79
    Delong diagram, 89
    heat affected zone, 85
        age hardened, 87
        austenitic, 85
        ferritic, 85

stainless steel (Continued)
heat affected zone
duplex, 86
martensitic, 85
Schaeffler diagram, 82
weld metals, 87
age hardened, 93
austenitic, 88
duplex, 93
ferritic, 88
martensitic, 87
welding metallurgy, 84
WRC-constitution diagram, 90
stainless steel filler metals
AWS A5.4 (SMAW), 230-235
AWS A5.9 (GMAW, GTAW, SAW), 236-241
AWS A5.22 (FCAW), 242-248
prEN 1600, 386-391
prEN 12072, 392-396
prEN 12073, 397-400
international cross references, 423-433, 457-466
strengthening mechanisms, 21
hardness changes, age hardened alloy, high heat input, 27
hardness changes, age hardened alloy, low heat input, 26
hardness changes, solution treated alloys, high heat input, 28
hardness changes, solution treated alloys, low heat input, 28
precipitation (age) hardening, 23
work hardening, 22
structural steels, 51
surfacing filler metals
AWS A5.13 (solid) (GMAW, GTAW, OFW, SMAW), 294-302
AWS A5.21 (composite) (GTAW, OFW, SMAW), 303-304

T

temper embritlement, 49
(*see also* alloy steels)
titanium, 111
titanium filler metals,
AWS A5.16 (GMAW, GTAW, PAW), 284-286
tungsten filler metals and cutting electrodes
AWS A5.12 (GTAW, PAW, GTAC, PAC), 288-290

W

welding terms
    english/french/spanish, 499
    spanish/english/french, 548
    french/english/spanish, 560
welding procedure control
    nomogram, 57
welding processes
    AWS designations, 6
welding thermal cycle
    heat affected zone, 21
    metallurgical effects, 20
weld metal solidification, 20
WFM No.
    Australia, 490-493
    Argentina, 489
    Canada, 487-488
    China, 494-495
    Europe, 482-486
    ISO, 496-497
    Japan, 477-481
    New Zealand, 490-491
    USA, 471-476

Z

zirconium filler metals
    AWS A5.24 (GMAW, GTAW, PAW), 292